GC Products, Replacement Parts, and Supplies Catalog

Version 0604

O·I·Analytical

A World of Solutions

ISO 9001 SGS

OICO NASDAQ LISTED

How to Order

Purchase products listed in this catalog directly from OI Analytical or from authorized distributors in locations throughout the world. Please contact OI Analytical for the OI Analytical distributor or representative nearest you.

Contact OI Analytical

Sales:	(800) 653-1711
FAX:	(979) 690-0440
Parts:	(800) 673-3750
Service:	(800) 336-1911
International Sales, Parts, and Service:	(979) 690-1711
Website:	***www.oico.com***
E-mail:	oimail@oico.com orders@oico.com

Order Mailing Address

OI Analytical
Order Entry Department
P.O. Box 9010
College Station, TX 77842-9010

When ordering please provide:

- Name, account number, company name, shipping and billing addresses, and telephone number(s).
- Your company's purchase order number or credit card number in the USA (Visa, MasterCard, AMEX).
- OI Analytical part number, description, and quantity of item(s) ordered.
- Tax exempt number (if applicable).

Publication 19480504GC

O·I·Analytical

CUSTOMER CARE

Our commitment to your satisfaction begins when you consider buying an OI Analytical instrument. We strive to develop and maintain a one-on-one relationship to carry you successfully through the purchase experience and throughout your future with OI Analytical's instruments.

We cultivate this highly-regarded relationship through customer-focused programs.

OI Analytical has made a long-term commitment to outstanding customer service. We offer a continuously growing network of support services designed to provide high quality service to our customers. OI Analytical offers a wide range of extended warranties and service contracts designed to meet your needs. Call to ask for details at (800) 653-1711.

Service Contracts O·I·Analytical
AT • YOUR • SERVICE

O·I·Analytical FINANCING

OI Analytical offers several finance programs for your convenience. Renting and leasing programs as well as our rent-to-own program allow you to get the equipment you need.

OI Analytical provides a domestic toll-free technical support hotline for instrument support as well as specialized applications. Call us about onsite specific applications training and hands-on seminars.

Customer Communications

OI Analytical is proud to provide the highest quality instruments available, backed by a commitment to quality, service, and support.

(800) 653-1711

Message from the President

Dear Valued Customer:

We are pleased to publish our new product catalog. This catalog is filled with quality instrumentation, parts, and supplies for analytical laboratories. We hope you find this OI Analytical catalog easy to use, with distinct sections identifying parts and supplies and detailed drawings to help make ordering even easier. We update product information frequently. For the latest version of this catalog containing the most current information, be sure to visit the OI Analytical website at ***www.oico.com***.

Providing world-class customer support and service is our main goal, and we are organized to do just that! We offer onsite visits by trained specialists to assist you in selecting the right product configuration for your needs. We also provide complete systems including product installation and startup. Our support continues after the sale with a rapid-response customer support center, application experts, and on-site repairs.

For over 30 years, we have been supplying high-quality, reliable, and easy-to-use products. We are dedicated to continuously improving all of our business resources. Some measure of our efforts include earning ISO 9001 certification of our quality system and CE certification, which guarantees that products with the CE mark are tested by independent experts to the most current electrical and mechanical standards.

Our goal is to be your supplier of choice. If you are not satisfied with our products or service...just call me!

William W. Botts
President/CEO

Table of Contents

How to Order ii

GC Sample Introduction Products 1

Eclipse Purge-and-Trap Sample Concentrator 2
Eclipse PC Sample Concentrator 4

Eclipse Modules and Accessories 5
Rapid Swap Eclipse Modules 5
pH Express 5
Foam Buster 6
Foam Sensor 6
Sparge Overfill Sensor (SOS) 6
On-Trap Injection Port 6
Infra-Sparge Sample Heater 7
Air-Tube Accessory 7
Additional Sample Concentrator Accessories 8

PT Express Dual Purge-and-Trap Interface 9

Sample Concentrator GC Accessories 11
Low-Dead-Volume Injector (LDVI) 11
EPC PCM Flow Module for Purge and Trap, LVDI, and Agilent 6890 11
Agilent 6890 Volatiles Inlet (Option 142) 11

Model 4551A Purge-and-Trap Water Autosampler 12
Standards Addition Module (SAM) 13

Model 4552 Purge-and-Trap Water/Soil Autosampler 14
Model 4552 Water Only Autosampler 14
Model 4552 Interface Kits, Accessories, and Options 15
Model 4552 Interface Cables 15

Model 4506 Automated Multipoint Process Sampler (AMPS) 16

GC Detector Products 19

Model 5380 Pulsed Flame Photometric Detector 20
Model 5380 PFPD with Pneumatics 20
Model 5380 PFPD without Pneumatics 21
Model 5380 PFPD for Agilent 6850 (EPC) 21
Model 5380 PFPD for the Agilent 6890 Valve Box 21
PFPDView Software 22

Model 4430 Photoionization Detector 23

Model 5320 Electrolytic Conductivity Detector 24
Model 5322 Dual ELCD 25

Model 5360 and 5360A Halogen Specific Detector (XSD) 26

Model 5350 Tandem PID/ELCD 28

Model 5390 Tandem PID/XSD 29

Model 4450 Tandem PID/FID with the Model 4410 and 4415 Flame-Ionization Detector 30
Model 4450 Tandem PID/FID Detector 30
Model 4415 FID for Varian GCs or the Shimadzu 17A 31

Detector Accessories for Agilent 5890 Series II and 6890 Series GCs 32

Detector Accessories for Varian GCs 34
Heater Blocks for Varian 3400/3600 GC 34

GC Analytical System Products 37

S-PRO 3200 Series GC Sulfur Systems 38
System VOC 40
System BTEX 41
Pesticide Analysis Systems 42
Gel Permeation Chromatography Cleanup 43
GPC AutoPrep 2000 43
Model SP 2000 44
RapidVap N2 Evaporation System 45
Fluorinated By-Products Analyzer 46
Laboratory-Based FBA GC System 46
On-line Process FBA 46
Custom-Designed Systems 47

GC Monitoring System Products 49

Series 3001 MINICAMS 50
Series 3001 MINICAMS Plug-in Modules 51
Series 2001 MINICAMS 52
Series 2001 MINICAMS Plug-in GC Modules 53
Sampling Accessories 54
Continuous Sampling System 54
Communication and Monitoring Data Acquisition Accessories 55
GC Monitoring Systems Supplies and Diagnostic Tools 56
Supplies 56
Repair and Diagnostic Tools 56
Monitoring VOCs Using the MINICAMS 57

GC Sample Introduction Replacement Parts and Supplies 59

Eclipse Sample Concentrator Replacement Parts and Supplies 60
Infra-Sparge Sample Heater Option Replacement Parts 65
Foam Buster Option Replacement Parts 65
Sparge Overfill Sensor (SOS) Option Replacement Parts 65
Model 4560 Sample Concentrator Replacement Parts and Supplies 66
Model 4551A Water Autosampler Replacement Parts and Supplies 71
Model 4551 Water Autosampler Replacement Parts and Supplies 74
Standards Addition Module (SAM) Replacement Parts and Supplies 77
Model 4552 Water/Soil Autosampler Replacement Parts and Supplies 78
DPM-16 Autosampler Replacement Parts and Supplies 85
Air Analysis Products Replacement Parts and Supplies 88
Cryo-Focusing Module (CFM) Replacement Parts and Supplies 89
Low-Dead-Volume Injector (LDVI) Replacement Parts and Supplies 91
Cable Selection Guide 94
Glassware Selection Guide 95
Purge Needle Selection Guide 96

GC Detectors Replacement Parts and Supplies 97

Photoionization Detector (PID) Replacement Parts and Supplies 98
Electrolytic Conductivity Detector (ELCD) Replacement Parts and Supplies 100

Halogen Specific Detector (XSD) Replacement Parts and Supplies 106
Tandem PID/ELCD and Tandem PID/XSD Replacement Parts and Supplies 109
Pulsed Flame Photometric Detector (PFPD) Replacement Parts and Supplies 110
Flame-Ionization Detector (FID) Replacement Parts and Supplies 113

GC Analytical System Replacement Parts and Supplies 117

Gas Chromatography Products Literature, Methods, and Applications 123
Product Information 124
Application Notes 126
Methods and Applications Guide 132

Gas Chromatography Service and Support 143
Service Products 144
Warranty Information 145
Catalog Information 146
Terms 147
Price Quotations 147
Order Shipment 147
Customer Accounts 147

Index 149

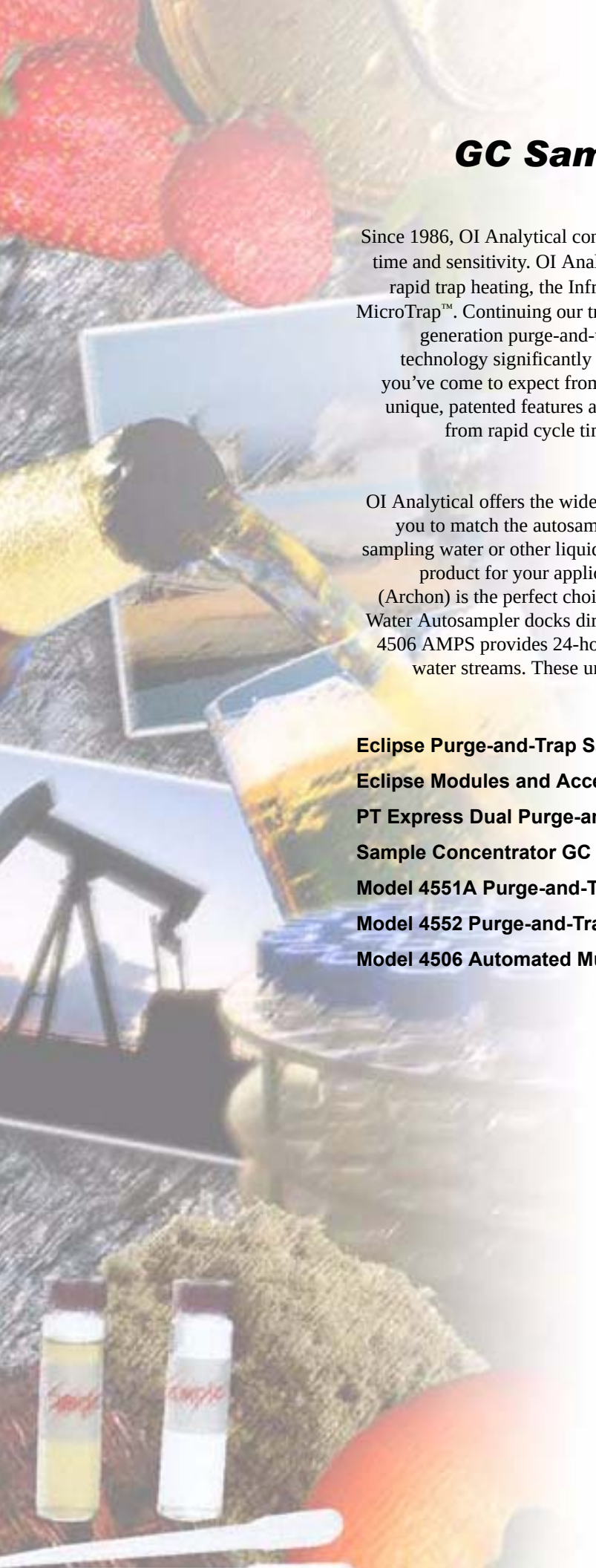

GC Sample Introduction Products

Since 1986, OI Analytical continuously improves purge-and-trap productivity, accuracy, cycle time and sensitivity. OI Analytical pioneered features such as Cyclone Water Management™, rapid trap heating, the Infra-Sparge™ Sample Heater, Silcosteel® sample pathways, and the MicroTrap™. Continuing our tradition of leading-edge technology, we now introduce our third-generation purge-and-trap sample concentrator, the Model 4660 Eclipse. Its innovative technology significantly enhances laboratory productivity with the highest reliability that you've come to expect from OI Analytical products. New from the ground up, the Eclipse's unique, patented features and options offer improvements in every aspect of VOC analysis, from rapid cycle time with improved reproducibility, to over one hundred enhanced maintenance features that keep your system up and running.

OI Analytical offers the widest range of purge-and-trap autosamplers on the market, allowing you to match the autosampler to your exact laboratory and sample requirements. Whether sampling water or other liquids, soil or solids, or any combination, OI Analytical has the right product for your application. The market-leading Model 4552 Water/Soil Autosampler (Archon) is the perfect choice for USEPA Method 5035. The Model 4551A Purge-and-Trap Water Autosampler docks directly under the Eclipse, saving valuable benchspace. The Model 4506 AMPS provides 24-hour continuous, automated VOC monitoring of single or multiple water streams. These units are compatible with all GC models and are designed to offer maximum performance and reliability.

Eclipse Purge-and-Trap Sample Concentrator 2

Eclipse Modules and Accessories 5

PT Express Dual Purge-and-Trap Interface 9

Sample Concentrator GC Accessories 11

Model 4551A Purge-and-Trap Water Autosampler 12

Model 4552 Purge-and-Trap Water/Soil Autosampler 14

Model 4506 Automated Multipoint Process Sampler (AMPS) 16

Eclipse Purge-and-Trap Sample Concentrator

Introducing the New Generation of Purge-and-Trap Technology

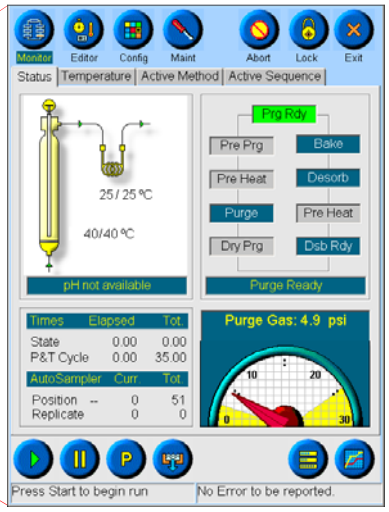

The Eclipse Status screen provides real-time instrument conditions at a glance.
The touchscreen display and accessible icons make the Eclipse the easiest purge-and-trap sample concentrator to operate.

- Intuitive Windows CE touchscreen user interface
- pH Express* fully automates sample pH measurement
- Foam Buster*, Foam Sensor*, and foam filter prevent system contamination
- Sparge Overfill Sensor (SOS)* averts system flooding
- Electronic pressure sensing with one-touch automated leak check capability
- Electronic log tracks all changes, events, faults, and errors
- Rapid Swap™ modular design and integrated diagnostics simplify instrument maintenance
- Includes PC-based operational software and direct LAN/Ethernet connectivity.
- Low-volume pneumatics (<3 mL) ensure superb chromatography

* Optional

The Model 4660 Eclipse, the next generation in purge-and-trap technology, provides numerous innovative features for unprecedented ease of use, improved productivity, rapid cycle time, lower maintenance, and significantly improved instrument reliability. Built on proven technology, the Eclipse's new features combine with OI Analytical's well-established, standard purge-and-trap advantages including Cyclone Water Management, rapid direct trap heating, and Infra-Sparge Sample Heater.

Intuitive Touchscreen Interface

Its intuitive Windows® CE user interface makes the Eclipse exceptionally easy to use. The large, full-color integrated LCD touchscreen provides real-time instrument status at a glance. Program, edit, or view methods and sequences without external keypads or controllers. Access instrument electronic logs and system diagnostics with one-touch icons to simplify and automate equipment use and maintenance. Every Eclipse includes Eclipse PC software, providing remote access and control from any PC connected through the instrument's direct Ethernet/LAN connection.

New Generation Technology Gives You the Edge

The innovative pH Express™ option completely automates sample pH measurement, ending costly, labor-intensive manual measurement and reporting. All pH sample readings log in the Eclipse's log file and are easily imported into a database or LIMS system. The Foam Buster™, Foam Sensor, and foam filter provide three levels of defense for the ultimate protection against system downtime caused by foaming samples. The Sparge Overfill Sensor™ (SOS) option prevents accidental sparge tube overfilling, preventing maintenance problems or expensive downtime. Electronic pressure monitoring provides one-touch automated leak checks, alarm functions, and a digital pressure display.

Eclipsing the Competition With Innovation

Direct trap heating
Rapid trap heating and cooling provides optimal chromatographic performance

Foam Buster and Foam Sensor
Avoid downtime caused by foaming samples

Patented Water Management System
Provides simply the best system available for consistent water removal

Electronic pressure control
Provides system monitoring and automated one-button leak checks

Patented Infra-Sparge Sample Heater
Accurate, fast, and consistent heating improves compound recoveries and %RSDs

Graphical user interface
Easy-to-use, intuitive interface operates via a touchscreen or networked PC, reducing errors and the new user's learning curve

Sparge Overfill Sensor
Eliminates accidental system flooding

One-touch icons
Setup, maintenance, and service functions keep you running and get you back online faster

Electronic log
Track all events, faults, and errors for accurate record keeping and troubleshooting

pH Express
Fully-automated sample pH sensing eliminate time-consuming and expensive manual pH measurements

LAN connectivity
Provides direct network-wide access to all instruments

Easy and fast component access
Simplifies system service and maintenance

Rapid Swap modular design
Eliminates GC downtime

Eclipse PC Sample Concentrator

The Eclipse PC Sample Concentrator offers the same performance as the Eclipse at a lower cost. The Eclipse PC does not include the Windows CE touchscreen display. The Eclipse PC software running on a local or remote PC controls the unit. Requires appropriate handshake cables to interface with the autosampler and GC. See “Cables–Eclipse” on page 60.

Product	PN
Eclipse Sample Concentrator (115 V)	321606
Eclipse Sample Concentrator (230 V)	321616
Eclipse PC Sample Concentrator (115 V)	321607
Eclipse PC Sample Concentrator (230 V)	321617

✓ Download or request document numbers 1917 and 1944 for more information

Requires appropriate handshake cables to interface with the autosampler and GC. See “Cables–Eclipse” on page 60

Electronic pressure monitoring and one-touch leak check

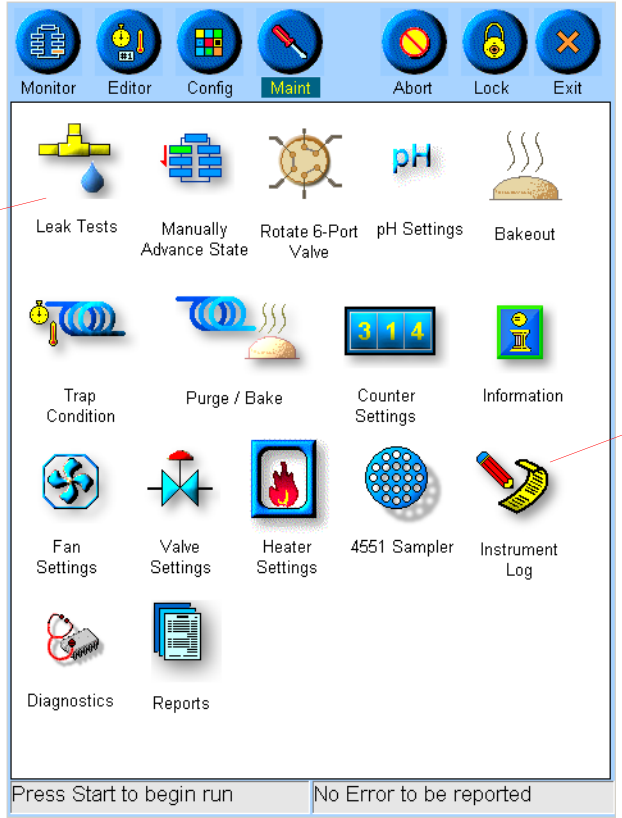

Electronic log tracks changes, events, and errors

The Maintenance screen accesses multiple maintenance and service functions

Eclipse Modules and Accessories

Eclipse pneumatics and electronics modules

pH Express

Rapid Swap Eclipse Modules

The Eclipse's revolutionary Rapid Swap modular design avoids system downtime for maintenance and repair. Exchange the electronics or pneumatics module in less than three minutes by simply removing four captive screws and disconnecting two cables. Keep a spare module on the shelf to swap when a module needs maintenance or repair. Your GC system continues running and generating revenue, while your module is repaired at your convenience.

Product	PN
Eclipse electronics module with touchscreen (115 V)	321091
Eclipse electronics module with touchscreen (230 V)	321618
Eclipse electronics module without touchscreen (115 V)	321747
Eclipse electronics module without touchscreen (230 V)	321748
Eclipse pneumatics module (115 V)	321090
Eclipse pneumatics module (230 V)	321619

pH Express

Completely automate and record water pH verification, as required by USEPA methods. Eliminate time-consuming and costly manual processes. The Eclipse automatically enters sample pH measurements into its electronic log for subsequent data reporting and exporting to LAN-based databases or LIMS systems. The pH Express features fully automated calibration. It is also available as a lower cost, manually-calibrated version.

Product	PN
pH Express, automated calibration	321164
pH Express, manual calibration	321614

Foam Buster

Break up foam before it contaminates sample pathways with the Foam Buster. Thermal energy breaks up the foam before it enters internal lines. Obtain valid VOC analyses from foaming samples handled by the Foam Buster instead of losing them down the drain. Avoid the time and cost of reanalysis, or additional sample preparation steps with the Foam Buster. *Requires frosted sparge vessels and attachment ferrule. Patent pending.*

Foam Sensor

Detect foaming samples with the optional Foam Sensor. With foam present, the optical Foam Sensor stops the run before sample pathway contamination occurs. Use the Foam Sensor alone or with the Foam Buster for added protection against foam. *Patent pending.*

Sparge Overfill Sensor (SOS)

Prevent sparge vessel overfilling and accidental system flooding with the Sparge Overfill Sensor (SOS). The SOS automatically detects liquid present in the sparge vessel and prevents unintended glassware double-filling, resulting in costly P&T and GC system flooding.

On-Trap Injection Port

The removable, glass-lined on-trap injection port allows direct, manual syringe injection of analytes into the trap for easy troubleshooting. Its removable design eliminates problems from septum bleed, leaking connections, and additional dead volume or adsorptive sites as seen in other designs.

Infra-Sparge Sample Heater

Heat soil or water samples in the Eclipse sparge vessel quickly, accurately, and reliably. The Infra-Sparge Sample Heater ensures maximum sample heating repeatability and significantly improves polar compound recoveries. The rapid-heating Infra-Sparge Sample Heater employs unique high-intensity, infrared heat with highly-reproducible direct sample temperature feedback through an inert thermocouple submerged in the sample.
OI Analytical's patented Cyclone Water Management system prevents transfer of excess water to the trap. *Requires factory installation.*

Air-Tube Accessory

Analyze air samples using this optional Eclipse accessory. Replace the purge-and-trap sparge vessel with a standard 6-mm or ¼" O.D. air tube (glass or stainless steel).

Air-Tube accessory

Product	PN
Foam Sensor	321610
Foam Buster	321611
Foam Sensor and Foam Buster package	321612
Sparge Overfill Sensor (SOS)	321165
On-Trap injection port	321676
Infra-Sparge Sample Heater for Eclipse (100/110 V)	321702
Infra-Sparge Sample Heater for Eclipse (220 V)	321703
Air-Tube accessory, 18 mm (115 V)	321706
Air-Tube accessory, 18 mm (230 V)	321707

Additional Sample Concentrator Accessories

Product	PN
Eclipse starter and support kit Includes a 5-mL Luer-Lok® sample syringe, 10-µL standard syringe, Method 502.2/524.2 standard, and tooling for minor repairs to the Eclipse Sample Concentrator. Recommended for laboratories new to purge-and-trap analysis.	228056
Ethernet cable for Eclipse to network	321902
Ethernet twisted pair cable for Eclipse to PC	321901
Frit sparger, 25 mL	321479
Frosted frit sparger, 25 mL	321081
Frosted frit sparger, 5 mL	321080
Frosted needle sparger, 25 mL	321697
Frosted needle sparger, 5 mL	321696
Frosted sparger attachment ferrule	321698
Heated transfer line, 60" (115 V)	321146
Heated transfer line, 60" (230 V)	321147
Needle sparge hardware kit for Eclipse with Foam Buster	321918
Needle sparge hardware kit for Eclipse without Foam Buster Adapts the Eclipse for needle sparging of soils or solids. Includes a needle purge gas line, side-hole purge needle, and a package of Mud-Dawgs™. Requires 18-mm needle sparger or disposable glassware for operation. See “Glassware Selection Guide” on page 95.	321615
One-year parts and supplies kit for Eclipse Includes selected quantities of commonly-used purge-and-trap expendable and nonexpendable parts.	321709
Sample pathway preventive maintenance kit for Eclipse Contains tubing, fittings, and ferrules used in the sample pathway.	322233
Sample pathway refurbishment kit for Eclipse Contains all parts included in the sample pathway preventive maintenance kit (PN 322233) plus the six-port valve, sample valve, cross, and sparge mount manifold.	322230
Transfer line tube assembly, 4 feet	321692
Transfer line tube assembly, 5 feet	321693
Union, connects Eclipse to Shimadzu GC	291625

For a complete list of Eclipse handshake and Ethernet cables, see “Cables–Eclipse” on page 60.

PT Express Dual Purge-and-Trap Interface

- Doubles laboratory productivity
- Maintains sample sequence integrity and optimum versatility
- Fully complies with USEPA Method 5035
- Simple and easy to use
- ✓ Download or request document number 1811 for more information

The PT Express™ significantly increases a VOC laboratory's throughput by coupling two OI Analytical purge-and-trap sample concentrators and autosamplers to a single GC or GC/MS. With VOC GC analysis times continuing to decrease with improved column and instrument design, the overall purge-and-trap cycle time has now become the limiting factor in decreasing analytical cycle time. The PT Express overcomes this limitation by synchronizing the purge-and-trap systems to prepare the next sample while the first is still being analyzed, usually doubling GC and GC/MS productivity. The PT Express is compatible with the OI Analytical Eclipse and Model 4560 Sample Concentrators and any OI Analytical autosamplers used for water, soil, or air sample analysis. *Requires cable selection. See page 10.*

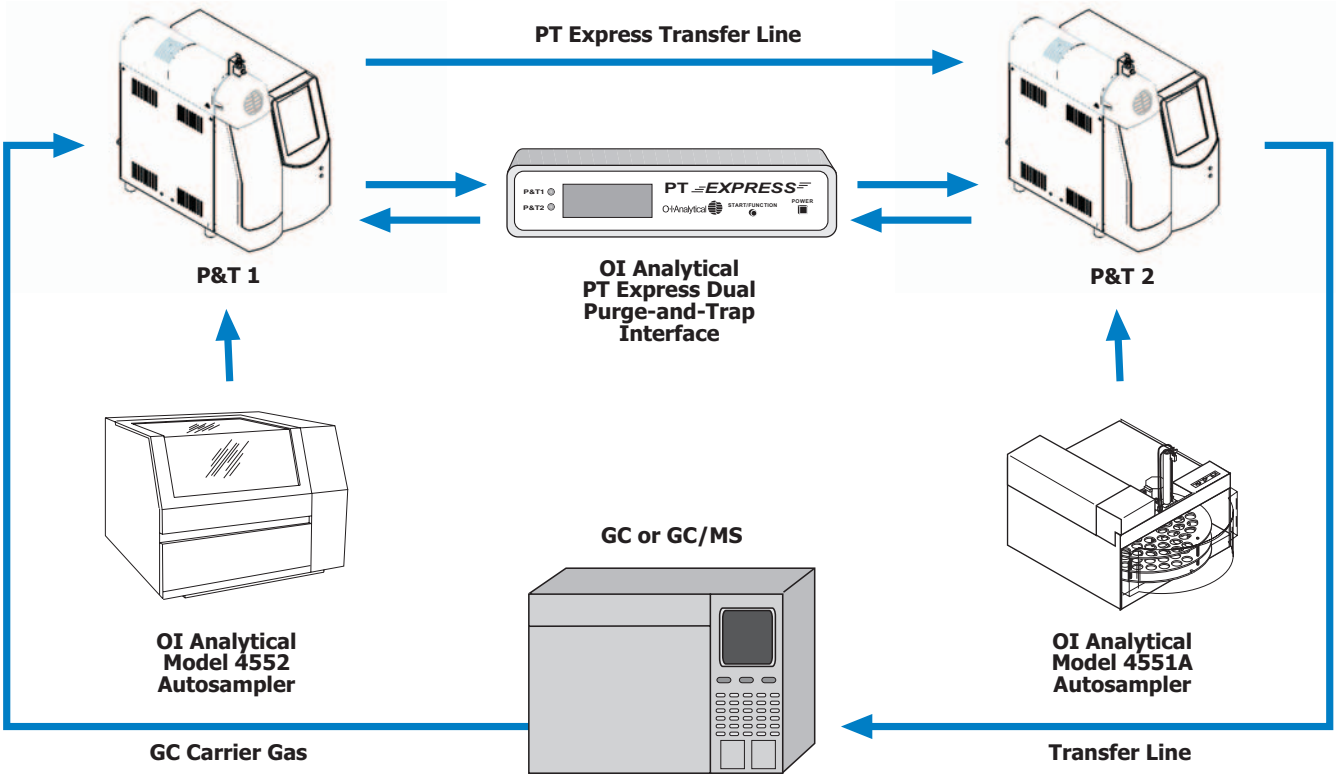

The PT Express synchronizes sample delivery from two purge-and-trap sample concentrators and autosamplers to a GC or GC/MS.

Product	PN
PT Express	320540
Cable, PT Express to Eclipse/Model 4560	320533
Cable, PT Express to Eclipse/Model 4560/Model 4552	320504
Cable, PT Express to Agilent 6890 remote	320534
Cable, PT Express to universal GC	320667
PT Express transfer line for Model 4560 (110 V), 27"	320652
PT Express transfer line for Model 4560 (220 V), 27"	320653
PT Express transfer line for Model 4560 (110 V), 30"	320654
PT Express transfer line for Model 4560 (220 V), 30"	320666

Service Contracts
O·I·Analytical
AT • YOUR • SERVICE

OI Analytical offers a wide range of extended warranties and service contracts designed to fit your needs. Call and ask for details at 1-800-336-1911.

Sample Concentrator GC Accessories

Low-Dead-Volume Injector (LDVI)

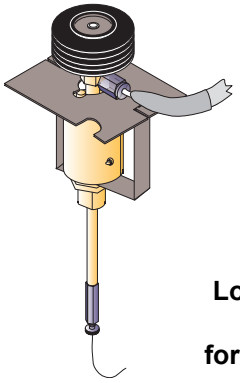

Low-Dead-Volume Injector for Agilent 5890 GC

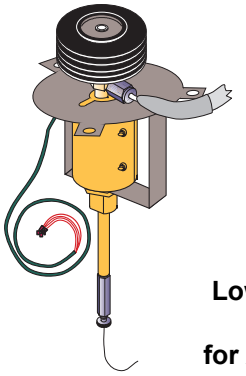

Low-Dead-Volume Injector for Agilent 6890 GC

This standalone GC injector optimizes interfacing a purge-and-trap sample concentrator to a GC with standard GC detectors (generally not used for interfacing mass spectrometers). Directly inject a sample into the LDVI or receive a gas sample desorbed from a sample concentrator without reconfiguring the GC inlet. Perform splitless volatile analyses by injection or via a sample concentrator without system modification. Use the LVDI's injection capability for quickly diagnosing system problems and troubleshooting instrument hardware. (100/110/220 V)

Product	PN
LDVI without flow control, Agilent 6890	280578
EPC inlet flow module for LDVI (PCM), Agilent 6890	285015
LDVI without flow control, Agilent 5890	229195

EPC PCM Flow Module for Purge and Trap, LVDI, and Agilent 6890

Add electronic flow control to a purge-and-trap sample concentrator when using an Agilent 6890 GC. This inlet flow module provides electronic flow control of GC carrier gas when coupled to the Model 4560 Sample Concentrator. Easily control and adjust flow from the GC's front panel or through Agilent ChemStation.

Agilent 6890 Volatiles Inlet (Option 142)

The Agilent 6890 volatiles interface with EPC, 0–100 psi operates in split, splitless, or direct mode but provides no direct injection capability as with the LDVI. It is Silcosteel-treated for inertness.

Product	PN
EPC PCM flow module, for use with sample concentrator, LVDI, and Agilent 6890	285015
Agilent 6890 volatiles inlet (option 142)	285031

Model 4551A Purge-and-Trap Water Autosampler

Eclipse Sample Concentrator with the Model 4551A Autosampler and Standards Addition Module (SAM)

- Automates VOC analysis of up to 51 samples
- Easily swapped sample carousel allows unlimited sample-load capacity to maximize GC throughput
- Direct docking to the OI Analytical Eclipse or Model 4560 Sample Concentrator minimizes benchspace requirements
- Proven sampling system provides maximum uptime and low support costs
- Programmable multiple rinses and blanks yields maximum flexibility
- Optional Standards Addition Module automates standard/surrogate addition from two independent reservoirs
- Water or lightly-particulated water (<100 µm) samples transfer without system clogging
- Spiral-design carousel promotes optimal septum-piercing accuracy
- Removable, lightweight sample carousel allows easy sample loading and unloading

✓ Download or request document number 1436 for more information

The Model 4551A Autosampler fully automates analyses of up to 51 clean water or lightly-particulated water samples. The easily-swapped carousel allows unlimited sample-load capacity to maximize GC throughput. The Model 4551A removes 5- or 25-mL sample volumes from standard 40-mL VOA vials and transfers them to the sparger on the Eclipse or Model 4560 Sample Concentrator. Program rinses, blanks, and replicates through the sample concentrator or PC software. The autosampler docks under the sample concentrator, saving valuable benchspace. The Model 4551A uses a tray and stationary needle assembly, avoiding high-maintenance, moving x-y arms and vial grippers. It provides improved system productivity through faster cycle times and lower maintenance downtime. The basic unit is configured with a 5-mL sample loop (25-mL loop optional). *Requires a gas supply regulated at 25–30 psi, not included.*

Product	PN
Model 4551A for Eclipse (100–230 V)	321710
Model 4551A for Eclipse with vial cooling (100–120 V)*	321711
Model 4551A for Eclipse with vial cooling (230–240 V)*	321712
Model 4551A for Model 4560 (100–230 V)	282749
Model 4551A for Model 4560 with vial cooling (100–120 V)*	319501
Model 4551A for Model 4560 with vial cooling (230–240 V)*	319456
Upgrade kit to Model 4551A for Eclipse	321608
Sample loop, 25 mL	259507
Refrigerated recirculating water bath	261909

**Requires an Infra-Sparge Sample Heater installed on the Eclipse Sample Concentrator. Does not include the refrigerated recirculating water bath.*

✓ Download or request document number 1573 for more information

Standards Addition Module (SAM)

Automate internal standard and surrogate addition with the SAM option. Add two separate 1-µL standard or surrogate additions to water samples during transfer from the Model 4551A to the Eclipse Sample Concentrator. The SAM contains two separate reservoirs that can add standards at user-defined, programmable sampling intervals.

Product	PN
SAM option for Model 4551A and Eclipse	316828

Download the latest product and applications information at www.oico.com.

Model 4552 Purge-and-Trap Water/Soil Autosampler

The Model 4552 Autosampler complies with USEPA Method 5035

- Market-leading water/soil autosampler
- Proven reliability through solid design
- Unique hot water rinse for the lowest sample carryover
- 51-postion capacity using an easily-removeable sample tray
- Internal and matrix spike standards addition
- Multiple method sequences per sample or sample tray
- ✓ Download or request document number 0756 for more information

The top-of-the-line Model 4552 automates purge-and-trap sample analyses of both liquids and soil or solids in the same run. The removable sample tray holds up to 51 samples and can cool to 4°C (optional) to meet USEPA method requirements. A sampling syringe transfers 1–25 mL sample volumes, which are automatically diluted from a blank water reservoir. Soil samples purge in the vial using either standard 40-mL VOA vials or patented double-ended SoilVials™. Features include a built-in dual internal standard addition capability, sample stirring, and the lowest sample carryover with hot water sample pathway rinsing and purging with gas after each run. The Model 4552 interfaces to the Eclipse, Model 4560, any Tekmar, or other manufacturer's sample concentrator. *Requires interface kit and cable. See "Model 4552 Interface Kits, Accessories, and Options" on page 15 and "Model 4552 Interface Cables" on page 15.*

Model 4552 Water Only Autosampler

A lower cost alternative to the Model 4552 Water/Soil Autosampler, this autosampler runs clean (nonparticulated) drinking water and wastewater samples only. It is similar to the Model 4552 Water/Soil Autosampler but with all components used for soil sampling removed. (No upgrade to run soil samples is available.) *Requires interface kit and cable. See "Model 4552 Interface Kits, Accessories, and Options" on page 15 and "Model 4552 Interface Cables" on page 15.*

Product	PN
Model 4552 Water/Soil Autosampler (100/110 V)	276568
Model 4552 Water/Soil Autosampler (220 V)	276576
Model 4552 Water Only Autosampler (110 V)	293126
Model 4552 Water Only Autosampler (220 V)	293134

Model 4552 Interface Kits, Accessories, and Options

Product	PN
Interface kit for Eclipse	321728
Interface kit for Model 4560	276592
Interface kit for Model 4460A or Tekmar LSC-2	276584
Interface Kit for Tekmar 2000/3000/3100	293043
Bar code reader	276709
Calibration bar and pin	03-505419-90
Needle sparge conversion kit to SoilVial	276717
Recirculating bath for vial cooling	261909
Rinse water kit	276725
Sample tray	03-505223-00
SoilVial conversion kit to needle sparge	276733
Model 4552 Windows software	03-505629-00

Model 4552 Interface Cables

Product	PN
Handshake pigtail cable to Agilent 6890	252213
Handshake pigtail cable to Agilent 5890	185868
Handshake pigtail cable to Varian 3400	188409
Handshake pigtail cable to Shimadzu 17A	244483
Cable to OI 4460/4560 to Agilent	284935
Cable to OI 4460/4560 to Varian 3400/3700	251694
Cable to OI 4460/4560 to Agilent 5890, RTE Agilent 1000 GC/MS software, Agilent 5970 MSD, or Agilent 5988 MS	03-505875-00
Cable to Tekmar LSC-2000/3000 to spade lugs	03-505872-00
Cable to Tekmar LSC-2000/3000 to Agilent 5890	03-505869-00
Cable to Tekmar LSC-2000/3000 to Varian 3400/3700	03-505868-00
Cable to Tekmar 2000/3000 with Agilent 6890	03-505873-00
Cable to Tekmar 2000/3000 with Agilent 5890 with 5970/71/72 MSD and Unix-B or MS-DOS, and 5890/5989 MS Engine	03-505874-00
Cable to Tekmar LSC-2000/3000 with Agilent 5995/85/87/88/92	03-505876-00

Model 4506 Automated Multipoint Process Sampler (AMPS)

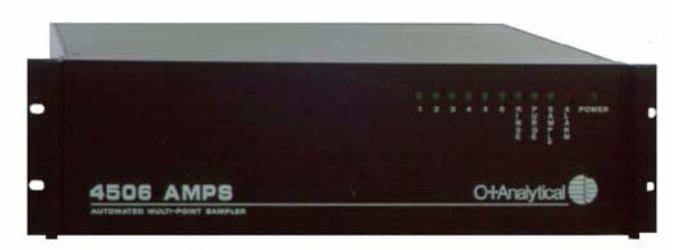

- Automated 24-hour toxic compound monitoring of up to six water supplies
- Allows unattended operation and eliminates manual sampling
- Inert sampling system maintains sample integrity and minimizes carryover
- Fully compliant with all USEPA VOC sampling and method requirements

✓ Download or request document number 1338 for more information

The AMPS is an automated, on-line, multipoint, continuous sampler for the Eclipse (or Model 4560) Sample Concentrator. Unattended sampling of up to six different water streams eliminates the need for labor-intensive, repeated hourly or daily manual sampling. Program sequences via easy-to-use WinAMPS Windows-based software. Customize any automated program required for discharge, process, or drinking water monitoring. The AMPS provides unattended, 24-hour water monitoring that follows all standard USEPA and other regulatory VOC analysis methods (unlike other systems on the market).

Product	PN
Model 4506 AMPS	309864
Sample head kit	312264
Blank water filter kit	312249
Sample loop kit, 5-mL	312561
Standards Addition Module (SAM) for AMPS and Eclipse	312439

O·I·Analytical FINANCING

We offer several finance programs for your convenience. Renting and leasing programs as well as our rent-to-own program allow you to get the equipment you need. Call and ask for details at (800) 653-1711.

Searching for a replacement part?
See page 117 for a complete list of
replacement parts and supplies.

GC Detector Products

OI Analytical's long history of supplying innovative, reliable, selective, and sensitive detector solutions to some of the most challenging analytical applications began in 1984 with OI Analytical's Electrolytic Conductivity Detector (ELCD) and the first (patented) tandem detector configuration for the Photoionization Detector (PID). This innovative approach lead to the creation of many USEPA and other worldwide regulatory methods that specify using OI Analytical's detector technology.

Our detector line continues to grow with the introduction of the Halogen Specific Detector (XSD™) and the Pulsed Flame Photometric Detector (PFPD). These new products expand the range of application solutions available to you. We strive to provide our customers with state-of-the-art analytical tools for solving the most difficult application problems.

All detectors are available for installing on most GC makes and models.

Model 5380 Pulsed Flame Photometric Detector 20

Model 4430 Photoionization Detector 23

Model 5320 Electrolytic Conductivity Detector 24

Model 5360 and 5360A Halogen Specific Detector (XSD) 26

Model 5350 Tandem PID/ELCD 28

Model 5390 Tandem PID/XSD 29

Model 4450 Tandem PID/FID with the Model 4410 and Model 4415 Flame-Ionization Detector 30

Detector Accessories for Agilent 5890 Series II and 6890 Series GCs 32

Detector Accessories for Varian GCs 34

Model 5380 Pulsed Flame Photometric Detector

Model 5380 PFPD

- Improved sensitivity and selectivity
- Simultaneous S and P outputs with dual channel output
- Selective detection of 28 specific elements
- Dual-gate capabilities for optimized selectivity
- Equimolar S response
- Multi-element capability
- ✓ Download or request document numbers 0104 and 0740 for more information

The Model 5380 PFPD is the latest advance in flame photometric detector design. Compared to standard FPDs, the PFPD offers significantly enhanced selectivity and improved sensitivity for sulfur (S) and phosphorus (P) compounds while using only 10% of combustion gas as standard FPDs. Two analog outputs, one for each separate element being analyzed, permit real-time simultaneous S and P, S and hydrocarbon, or many other dual-element outputs. WinPulse™ Window-based software included with the PFPD optimizes operational parameters. The PFPD selectively detects over 28 different elements (not simultaneously). The PFPD is available with either manual flow control or electronic flow control (EPC) of detector gases.

Model 5380 PFPD with Pneumatics

Includes the 5380 Detector Controller, PFPD assembly with GC-specific mounting bracket, PMT and optical filter optimized for sulfur analysis (other types available as options), manual flow control, WinPulse software package, supplies, and operator's manual. *Requires two appropriate signal cables and proper hardware to input the 0–1 volt signal into the data system used.*

Product	PN
Model 5380 with pneumatics (110 V), Agilent 6890	286278
Model 5380 with pneumatics (220 V), Agilent 6890	285080
Model 5380 with pneumatics (110 V), Agilent 5890	283127
Model 5380 with pneumatics (220 V), Agilent 5890	285072
Model 5380 with pneumatics (110 V), Shimadzu 17A version 3 or later	285098
Model 5380 with pneumatics (220 V), Shimadzu 17A version 3 or later	287656
Model 5380 with pneumatics (110 V), Thermo Finnigan Trace 2000	319821
Model 5380 with pneumatics (220 V), Thermo Finnigan Trace 2000	320379

Need more information on petrochemical sample analysis? Visit us at www.oico.com or call us and request document 2074, "Petrochemical Application Support Library CD."

Model 5380 PFPD without Pneumatics

Use this PFPD with an Agilent 6890 (or certain other GC makes and models) when the GC's EPC flow control provides detector gas flow control. Includes 5380 Detector Controller, PFPD assembly with GC-specific mounting bracket, PMT and optical filter optimized for sulfur analysis (other types available as options), WinPulse software package, supplies, and operator's manual. *Requires Agilent 6890 cabling and heater control to be installed in the GC. Requires Aux (275974 and 286344) or OIM PFPD EPC Flow Module (312686), and two appropriate signal cables.*

Product	PN
Model 5380 without pneumatics (110 V), Agilent 6890	289603
Model 5380 without pneumatics (220 V), Agilent 6890	289611

OI Analytical detectors are available for additional GC models not listed above. Contact the OI Analytical Sales Department for more information.

Model 5380 PFPD for Agilent 6850 (EPC)

This PFPD is specifically designed for installing on the Agilent 6850 GC. Includes the 5380 Detector Controller, PFPD assembly with GC specific mounting bracket, signal board, PMT and optical filter optimized for sulfur analysis (other types available as options), WinPulse software package, supplies, and operator's manual. *Requires OIM EPC Flow Module (285049) and two appropriate signal cables.*

Product	PN
Model 5380 (110 V), Agilent 6850	312694
Model 5380 (220 V), Agilent 6850	312363

Model 5380 PFPD for the Agilent 6890 Valve Box

A specially-configured mounting bracket is included for installing the PFPD in the Agilent 6890 GC's valve box area (no valve oven can be installed in the GC when using this option). *Requires Agilent 6890 cabling and heater control to be installed in the GC. Requires Aux (275974 and 286344) or OIM PFPD EPC Flow Module (312686), and two appropriate signal cables.*

Product	PN
Model 5380 with pneumatics (110 V), valve box	296400
Model 5380 with pneumatics (220 V), valve box	296418
Model 5380 without pneumatics (110 V), valve box	296384
Model 5380 without pneumatics (220 V), valve box	296392

- Displays post-run pulse emission profiles and up to five chromatograms using different gate parameters
- Provides heteroatom structural information of unknown compounds
- Reanalyzes off-line chromatographic runs under different PFPD parameters
- Improves sensitivity and selectivity with post-run gate optimization
- Enhances interhetroatom selectivity with off-line optimization of dual gate modes
- Provides dual gate response ratios for elemental identification and multi-element analysis

✓ Download or request document number 1435 for more information

PFPDView Software

PFPDView software option for the PFPD allows the operator to reprocess (post-run) an entire chromatographic run under different PFPD operational parameters without rerunning the analysis. PFPDView is ideal for method development, obtaining structural information on unknown compounds, troubleshooting, gate optimization, and more. Display up to five chromatograms simultaneously using different gate parameters. Export newly-created data files to a data system in standard A.I.A. format.

Product	PN
PFPDView software	312330

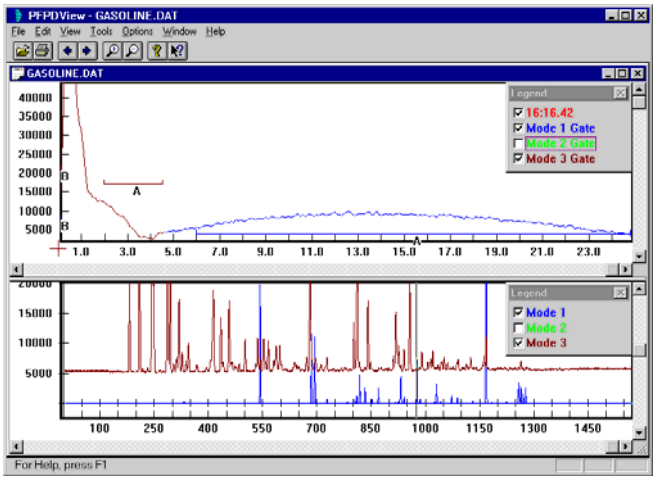

PFPDView screen

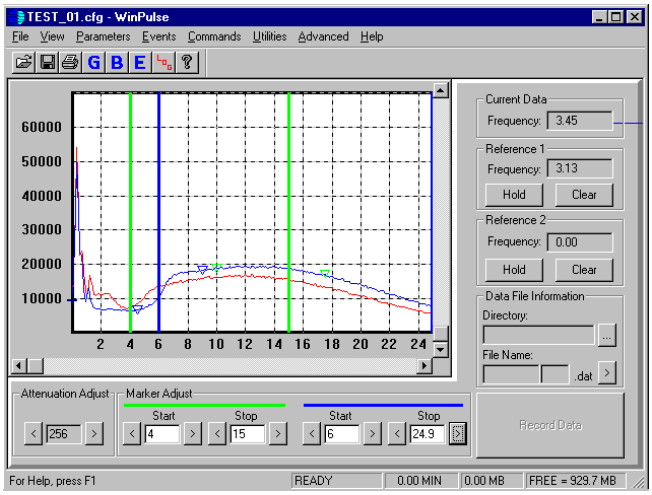

WinPULSE screen

Model 4430 Photoionization Detector

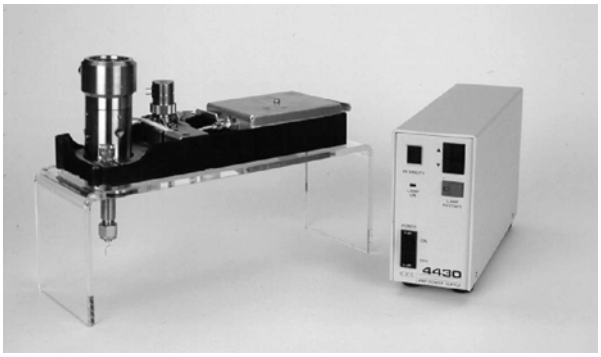

Model 4430 Photoionization Detector

- Unique Window Sweep™ UV lamp design minimizes window surface fouling by column effluent
- Lampsaver™ circuit turns off the lamp when not in use, extending lamp lifetime
- Directly interfaces to the ELCD, XSD, or FID to form tandem detector systems, requiring only one detector port
- Vents undesirable sample solvents

✓ Download or request document number 0243 for more information

The market-leading Model 4430 PID features a unique Window Sweep™ design that prevents the column effluent from contacting and contaminating the lamp window. This minimizes downtime for window cleaning and allows analyzing photosensitive compounds that would otherwise polymerize on the window surface. The Model 4430 uses the GC's own FID electrometer board (and bias voltage if required). The GC must be equipped with gas supplies for both sweep gas and makeup gas (typically carrier gas) or reaction gas for a second detector if operating in tandem mode.

Product	PN
Model 4430 PID for Agilent 6890 (110 V)	274654
Model 4430 PID for Agilent 6890 (220 V) Includes PID with sweep gas design, lamp power supply module, mounting bracket assembly, 10.0-eV lamp, electrometer, interface cards, and operator's manual. *Requires appropriate 6890 OIM EPC gas module and one electrometer slot on the Agilent 6890 GC.*	274662
Model 4430 PID for Agilent 5890 (110 V)	187310
Model 4430 PID for Agilent 5890 (220 V) Includes PID with sweep gas design, lamp power supply module, mounting bracket assembly, 10.0-eV lamp, electrometer card, gas flow module, and operator's manual. *Requires one electrometer slot on the Agilent 5890 GC.*	234336
Model 4430 PID for Varian 3400/3600 (110 V)*	193524
Model 4430PID for Varian 3400/3600 (220 V)* Includes PID with sweep gas design, lamp power supply module, 10.0-eV lamp, mounting bracket assembly, and operator's manual.* *Requires gas supply, electrometer board on the GC, and appropriate heater block (see "Detector Accessories for Varian GCs" on page 34)*	276766
Model 4430 PID for Varian 3800 (110 V)	301036
Model 4430 PID for Varian 3800 (220 V)	301044
Model 4430 PID for Shimadzu (110 V)	250720
Model 4430 PID for Shimadzu (220 V) Includes PID sensor with sweep gas design, lamp power supply module 10.0-eV lamp, electrometer cable, mounting bracket assembly, polarizing voltage cable, and operator's manual. *Requires gas supply and electrometer board on the GC.*	274415

OI Analytical detectors are available for additional GC models not listed above. Please contact the OI Analytical Sales Department for more information.

*Orders for OI Analytical detectors for Varian 3400/3600 GC must also include a detector heater block. See "Detector Accessories for Varian GCs" on page 34.

Model 5320 Electrolytic Conductivity Detector

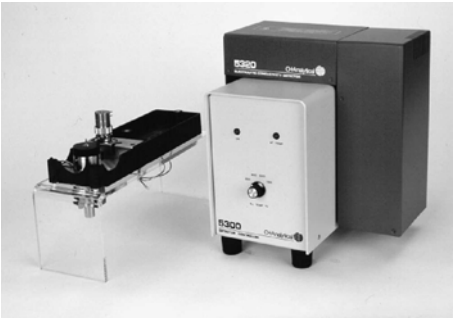

Model 5320 Electrolytic Conductivity Detector

- Simplified design improves reliability
- Minimal operator interface and adjustments make the detector easy to learn, maintain, and service
- Detector controller is compatible with the Model 5360 XSD
- Directly interfaces to most GC makes and models
- ✓ Download or request document numbers 0104 and 0700 for more information

The Model 5320 ELCD is OI Analytical's third-generation halogen-selective ELCD. With its newly-developed cell, reactor, solvent system, and electronics, the Model 5320 represents a true advance in GC detector technology. The 5300 ELCD series provides even greater reliability and ease-of-use at a significant cost savings while achieving the same detector performance as our earlier model. An appropriate signal cable to the GC data handling system is required. Some models of GCs require a gas flow module (H_2).

Product	PN
Model 5320 ELCD for Agilent 6890 (100/110 V)	274738
Model 5320 ELCD for Agilent 6890 (220 V) Includes 5300 Detector Controller with reactor temperature control, cell assembly power supply, quick-release reactor design, 1⁄16" low-internal-volume detector base, integrated cell-solvent assembly with quick-change resin cartridge, startup kit, and operator's manual. Requires detector signal cable (see "Detector Accessories for Agilent 5890 Series II and 6890 Series GCs" on page 32) and 6890 OIM EPC gas module.	274746
Model 5320 ELCD halogen mode for Agilent 5890 (100/110 V)	274910
Model 5320 ELCD halogen mode for Agilent 5890 (220 V) Includes 5300 Detector Controller with reactor temperature control, cell assembly power supply, quick-release reactor design, 1⁄16" low-internal-volume detector base, integrated cell-solvent assembly with quick-change resin cartridge, gas flow module, startup kit, and operator's manual. *Requires detector signal cable (see "Detector Accessories for Agilent 5890 Series II and 6890 Series GCs" on page 32).*	274928
Model 5320 for Varian 3400/3600 (110 V)*	291278
Model 5320 for Varian 3400/3600 (220 V) Includes 5300 Detector Controller with reactor temperature control, cell assembly power supply, quick-release reactor design, 1⁄16" low-internal-volume detector base, integrated cell-solvent assembly with quick-change resin cartridge, startup kit, and operator's manual. *Requires detector signal cable, gas flow module, and appropriate heating block (see "Detector Accessories for Varian GCs" on page 34).*	291310
Model 5320 for Varian 3800 (110 V)	301051
Model 5320 for Varian 3800 (220 V) Includes 5300 Detector Controller with reactor temperature control, cell assembly power supply, quick-release reactor design, 1⁄16" low-internal-volume detector base, integrated cell-solvent assembly with quick-change resin cartridge, startup kit, and operator's manual. *Requires detector signal cable and gas flow module (see "Detector Accessories for Varian GCs" on page 34).*	301069

OI Analytical detectors are available for additional GC models not listed above. Please contact the OI Analytical Sales Department for more information.

*Orders for OI Analytical detectors for Varian 3400/3600 GC must also include a detector heater block. See "Detector Accessories for Varian GCs" on page 34.

Experience worry-free instrument ownership with an OI Analytical service contract or extended warranty. Call and ask us for more information at (800) 336-1911.

Model 5322 Dual ELCD

The Model 5322 ELCD consists of two detectors for mounting on a single GC (uses two detector ports). The detectors operate with two 5300 Detector Controllers. Each detector provides a 0–1 V signal. Appropriate signal cables are required to match the output of the data system used. Some GC models also require a gas flow module (H_2).

Product	PN
Model 5322 Dual ELCD halogen mode for Agilent 6890 (110 V)	294249
Model 5322 Dual ELCD halogen mode for Agilent 6890 (220 V) Includes 5300 Detector Controller with reactor temperature control, cell assembly power supply, quick-release reactor design, two 1⁄16" low-internal-volume detector bases and mounting assemblies, two integrated cell-solvent assemblies with quick-change resin cartridge, two-line gas flow module, startup kits, and operator's manual. *Requires two detector signal cables (see "Detector Accessories for Agilent 5890 Series II and 6890 Series GCs" on page 32) and appropriate 6890 OIM EPC gas module.*	294256
Model 5322 Dual ELCD for Agilent 5890 (110 V)	285122
Model 5322 Dual ELCD for Agilent 5890 (220 V) Includes 5300 Detector Controller with reactor temperature control, cell assembly power supply, quick-release reactor design, two 1⁄16" low-internal-volume detector bases and mounting assemblies, two integrated cell-solvent assemblies with quick-change resin cartridge, startup kits, and operator's manual. *Requires two detector signal cables (see "Detector Accessories for Agilent 5890 Series II and 6890 Series GCs" on page 32).*	294231

Download the latest product and applications information at www.oico.com.

Model 5360 and 5360A Halogen Specific Detector (XSD)

Model 5360A Halogen Specific Detector

- Provides high sensitivity with selective halogenated compound detection
- Stable and easily-changed detector probe assembly and reactor simplifies maintenance
- Requires only air (20–30 mL/minute) to operate
- Model 5360A XSD includes an improved heated-base design for Agilent 6890 GCs
- 5300 Detector Controller can be used with the Model 5320 ELCD
- Includes designs for many GC models
- Enhanced venting option improves performance

✓ Download or request document numbers 0104 and 0700 for more information

OI Analytical's Model 5360 and Model 5360A XSD selectively detect halogenated compounds. Their simple design improves reliability and reproducibility. It significantly reducing maintenance versus the ELCD by eliminating the need for organic solvents and reaction tubes. The XSD provides an excellent alternative in many applications currently using either the ELCD or electron capture detectors (ECD). The new Model 5360A for the Agilent 6890 GC includes a heated-base design for improved performance that minimizes baseline rise during temperature programming and improves venting capabilities.

Product	PN
Model 5360A XSD for Agilent 6890 (100/120 V)	319522
Model 5360A XSD for Agilent 6890 (220 V) Includes the 5300 Detector Controller with temperature control and detector electrometer, XSD sensor, quick-release XSD reactor, mounting base assembly with new heated base design, startup kit, and operator's manual. *Requires detector signal cable (see "Detector Accessories for Agilent 5890 Series II and 6890 Series GCs" on page 32) and appropriate 6890 OIM EPC gas module.*	319757
Model 5360 XSD for Agilent 5890 (110 V)	250662
Model 5360 XSD for Agilent 5890 (220 V) Includes the 5300 Detector Controller with temperature control and detector electrometer, XSD sensor, quick-release XSD reactor, mounting assembly and bracket, one-line gas flow module, startup kit, and operator's manual. *Requires detector signal cable (see "Detector Accessories for Agilent 5890 Series II and 6890 Series GCs" on page 32).*	274894
Model 5360 XSD for Shimadzu (110 V)	290643
Model 5360 XSD for Shimadzu (220 V) Includes the 5300 Detector Controller with temperature control and detector electrometer, XSD sensor, quick-release XSD reactor, mounting assembly and bracket, startup kit, and operator's manual. *Requires detector signal cable (see "Detector Accessories for Varian GCs" on page 34) and appropriate gas supply.*	291906
Kit for adding XSD to existing Model 4430 PID	285809

Product	PN
Model 5360 XSD for Varian 3800 (110 V)	301077
Model 5360 XSD for Varian 3800 (220 V) Includes 5300 Detector Controller with temperature control and detector electrometer, XSD sensor, quick-release XSD reactor, mounting assembly and bracket, startup kit, and operator's manual. *Requires detector signal cable (see "Detector Accessories for Varian GCs" on page 34) and appropriate gas supply.*	306290
XSD venting option for Agilent 6890	319514
XSD venting option for Agilent 5890	246074
XSD venting option for Varian 3800	306449
XSD venting option for Shimadzu 17A Permits venting of the column effluent from the Model 5360/5360A XSD. Contains all hardware and cabling required for installation onto the detector. Controlled via the GC timed events relay.	290635

OI Analytical detectors are available for additional GC models not listed above. Please contact the OI Analytical Sales Department for more information.

O·I·Analytical FINANCING

We offer several finance programs for your convenience. Renting and leasing programs as well as our rent-to-own program allow you to get the equipment you need. Call and ask for details at (800) 653-1711.

Model 5350 Tandem PID/ELCD

Model 5350 PID/ELCD Tandem Detector

- Unique tandem design eliminates transfer lines and minimizes dead volume
- Patented tandem detector design uses only one GC detector port
- Unique UV lamp Window Sweep™ design minimizes fouling from window surface contamination
- Lampsaver™ circuit turns off the lamp when not in use, extending lamp lifetime
- Incorporates quick-change, disposable deionizing resin cartridge and simplified solvent system
- Model 5300 Detector Controller used for the ELCD is also compatible with the OI Analytical Halogen Specific Detector (XSD)

✓ Download or request document numbers 0104 and 1047 for more information

The Model 5350 Tandem PID/ELCD is a versatile instrument specified in many USEPA methods for the determining volatile organic compounds. The PID provides aromatic and olefin response and the ELCD selectively detects halogenated compounds. The PID/ELCD uses OI Analytical's patented tandem design to provide dual detector capability to a GC using only one GC detector port. The low-cost Model 5350 uses individual control boxes for the PID and ELCD. Appropriate cables and gas supplies are required.

Product	PN
Model 5350 PID/ELCD for Agilent 6890 (110 V)	274811
Model 5350 PID/ELCD for Agilent 6890 (220 V) Includes the 5300 Detector Controller with reactor temperature control, cell assembly power supply, quick-release reactor design, mounting bracket assembly, integrated cell-solvent assembly with quick-change resin cartridge, PID sensor with sweep gas design, 10.0-eV lamp, PID 4430 lamp power supply, PID electrometer, startup kits, and operator's manuals. *Requires ELCD signal cable (see "Detector Accessories for Agilent 5890 Series II and 6890 Series GCs" on page 32) and appropriate 6890 OIM EPC gas module*	274829
Model 5350 PID/ELCD for Agilent 5890 (110 V)	274936
Model 5350 PID/ELCD for Agilent 5890 (220 V) Includes the 5300 Detector Controller with reactor temperature control, cell assembly power supply, quick-release reactor design, mounting bracket assembly, integrated cell-solvent assembly with quick-change resin cartridge, PID sensor with sweep gas design, 10.0-eV lamp, PID 4430 lamp power supply, PID electrometer, two-line gas flow module, startup kits, and operator's manuals. *Requires ELCD signal cable (see "Detector Accessories for Agilent 5890 Series II and 6890 Series GCs" on page 32).*	274944
Model 5350 PID/ELCD for Varian 3800 (110 V)*	301085
Model 5350 PID/ELCD for Varian 3800 (220 V)* Includes the 5300 Detector Controller with reactor temperature control, cell assembly power supply, quick-release reactor design, mounting bracket assembly, integrated cell-solvent assembly with quick-change resin cartridge, PID sensor with sweep gas design, 10.0-eV lamp, PID 4430 lamp power supply, startup kits, and operator's manuals. *Requires ELCD and PID signal cables, electrometer board, and dual gas supplies (see "Detector Accessories for Varian GCs" on page 34).*	301093

The Tandem PID/ELCD are available for the Varian 3400/3600 GCs on request. Please contact the OI Analytical Sales Department for more information. Orders for OI Analytical detectors for Varian 3400/3600 GC must include a detector heater block. See "Detector Accessories for Varian GCs" on page 34.

Model 5390 Tandem PID/XSD

Model 5390 PID/XSD Tandem Detector

- Unique tandem design eliminates transfer lines and minimizes dead volume
- Patented tandem detector design uses only one GC detector port
- Unique UV lamp Window Sweep™ design minimizes fouling from window surface contamination
- Lampsaver™ circuit turns off the lamp when not in use, extending lamp lifetime
- Low maintenance and increased stability and reliability

✓ Download or request document numbers 0104 and 0880 for more information

As an alternative to the OI Analytical Tandem PID/ELCD, the Model 5390 Tandem PID/XSD allows simultaneous detection of aromatics and halogenated compounds while only occupying a single detector port on the GC. OI Analytical holds a patent on the tandem PID/XSD design (U.S. patent no. 5,578,271). The Model 5390 uses individual control boxes for the PID and XSD. *Requires appropriate gas flow module, signal cable, and gas supplies.*

Product	PN
Model 5390 PID/XSD for Agilent 6890 (110 V)	275073
Model 5390 PID/XSD for Agilent 6890 (220 V) Includes 5300 Detector Controller with temperature control and detector electrometer, XSD sensor, quick-release XSD reactor, mounting bracket assembly, PID sensor with sweep gas design, 10.0-eV lamp, PID 4430 lamp power supply, PID electrometer, startup kits, and operator's manuals. *Requires XSD signal cable and appropriate 6890 OIM EPC gas module.*	280644
Model 5390 PID/XSD for Agilent 5890 (110 V)	275065
Model 5390 PID/XSD for Agilent 5890 (220 V) Includes 5300 Detector Controller with temperature control and detector electrometer, XSD sensor, quick-release XSD reactor, mounting bracket assembly, PID sensor with sweep gas design, 10.0-eV lamp, PID 4430 lamp power supply, PID electrometer, two-line gas flow module, startup kits, and operator's manuals. *Requires XSD signal cable.*	280636
Kit to add XSD to existing PID for Agilent 5890	285809
Kit to add XSD to existing PID for any GC	320829

For international pricing, contact your local OI Analytical representative. For contact information, visit us at www.oico.com.

Model 4450 Tandem PID/FID with the Model 4410 and 4415 Flame-Ionization Detector

Model 4450 Tandem Photoionization/ Flame-Ionization Detector (PID/FID)

- Eliminating transfer lines improves peak shape and detector performance
- Patented tandem detector design uses only one GC detector port
- Tandem detector design enables obtaining screening and confirmatory information using a single sample injection
- Uses GC electronics or OI Analytical's dual channel electrometer

✓ Download or request document number 233 for more information

Model 4450 Tandem PID/FID Detector

The Model 4450 is a tandem detector system incorporating the Model 4430 PID and Model 4410 FID using a single detector port on the GC. Many regulatory methods for VOC analysis including USPEA, GRO, and MA VPH methods specify this tandem detector. Obtain excellent simultaneous results with the PID/FID using either packed or capillary columns.

Product	PN
Model 4450 PID/FID for Agilent 6890 (110 V)	274837
Model 4450 PID/FID for Agilent 6890 (220 V) Includes the PID sensor with sweep gas design, lamp power supply, 10.0-eV lamp, FID sensor, two electrometer cards, mounting bracket assembly, and operator's manuals. *Requires two electrometer slots on the Agilent 6890 GC and appropriate 6890 EPC or manual gas module.*	274845
Model 4450 PID/FID for Agilent 5890 (110 V)	192138
Model 4450 PID/FID for Agilent 5890 (220 V) Includes the PID sensor with sweep gas design, lamp power supply, 10.0-eV lamp, FID sensor, two electrometer cards, two-line PID/FID gas flow module, mounting bracket assembly, and operator's manuals. *Requires two electrometer slots on the Agilent 5890 GC.*	258749
Model 4410 FID for Agilent 5890 (for PID/FID) (90 V) Includes the FID body, gas flow module, electrometer card, and operator's manual. Specifically designed for tandem PID/FID operation. *Requires Model 4430 PID. Requires one electrometer slot on the Agilent 5890 GC.*	195354

See our complete list of consumables on page 19.

Model 4415 FID for Varian GCs or the Shimadzu 17A

The Model 4415 FID is an FID available for tandem operation with the Model 4430 PID on non-Agilent GCs. This new model uses the GC's FID electrometer to provide tandem PID/FID capability to most GC models.

Product	PN
Model 4415 FID for Varian 3400/3600/3800 (110/220 V)* Includes FID body, cables, and operator's manual. Specifically designed for tandem PID/FID operation. *Requires Model 4430 PID, GC's FID electrometer, appropriate gas supply, and appropriate heater block (for Varian only)*	283341
Model 4415 FID for Shimadzu 17A (110 V) Includes FID body, cables, and operator's manual. Specifically designed for tandem PID/FID operation. *Requires Model 4430 PID, GC's FID electrometer, and appropriate gas supply*	284612

*Orders for OI Analytical detectors for Varian 3400/3600 GC must also include purchasing a detector heater block. See "Detector Accessories for Varian GCs" on page 34 for the appropriate heater block.

Customer Communications

Have a question about our instruments or an application? Call us about onsite specific applications training and hands-on seminars.
Call us at our toll-free technical support hotline (800) 336-1711.

Detector Accessories for Agilent 5890 Series II and 6890 Series GCs

Still have questions? Call us and let us help!
(800) 653-1711

Signal Cables

Product	PN
5360/5380/5200/4440/4420 Detectors	
Cable, BNC to Agilent 5890 AIB	229641
Cable, BNC to Agilent 6890 AIB	274852
Cable, BNC to Agilent integrator	229633
Cable, BNC to spade lugs	215962
5320 Detector	
Cable, cell amp to Agilent 5890 AIB	246371
Cable, cell amp to Agilent 6890 AIB	246389
Cable, cell amp to Agilent Integrator	246397
Cable, cell amp to spade lugs	246405
Cable, Agilent 6890 external events	252569
Cable Agilent 6890 analog signal cable to spade lugs	252551

*BNC Connectors are used on Models 52XX, 5360, and 5380 detectors

Electrometers

Product	GC	PN
PID or FID electrometer card	Agilent 5890	187344
PID or FID electrometer card	Agilent 6890	274860
PID or FID interface card	Agilent 6890	274878
Agilent analog input board (AIB)	Agilent 5890	187716K
Agilent analog input board (AIB)	Agilent 6890	274886
OI Analytical single channel electrometer (110 V)	All GCs	194720
OI Analytical dual channel electrometer (110 V)	All GCs	194910

Gas Flow Modules for Agilent 5890

Product	PN
One-line 5220	225037
Two-line dual ELCD (5322)	232371
Two-line PID/ELCD	187302
Three-line PID/FID	192013

Gas Flow Modules for Agilent 6890

Product	PN
Inlet Gas Flow Modules	
PCM (EPC) pneumatic control module kit	285015
Detector Gas Flow Modules	
Aux-EPC module	275974
OIM EPC (must supply exact detector configuration with order)	285049
OIM EPC kit for Model 5380 PFPD	312686

Reactor Bases

Product	PN
Model 5320 ELCD 1⁄16" Agilent 5890	279828
Model 5320 ELCD 1⁄16" Agilent 6890	279885
Model 5360 XSD 1⁄16" Agilent 5890	246066
Model 5360 XSD 1⁄16" Agilent 6890	279869
Model 5360A XSD 1⁄16" Agilent 6890	319520

Ferrules for Detector Bases

Detector Base	Column I.D.	Ferrule I.D.	Unit	PN
1⁄32"	0.53 mm	0.8 mm	6/pk	255786
1⁄32"	0.32 mm	0.5 mm	6/pk	255794
1⁄32"	<0.32 mm	0.4 mm	each	236505
1⁄16"	0.53 mm	0.8 mm	10/pk	196105
1⁄16"	0.32 mm	0.5 mm	10/pk	196113
1⁄16"	<0.32 mm	0.4 mm	10/pk	208330

Need more information on the S-PRO 3200 Series GC Sulfur Systems?
Visit us at www.oico.com and download "S-PRO 3200 Automated GC Systems for Sulfur Analysis" (document number 1700) or call us and request a copy.

Detector Accessories for Varian GCs

Signal Cables

Product	PN
BNC to spade lugs (72") Carries the detector signal from the 5200/5300/5380 Detector Controller to spade lug connectors.	215962
Analog/status (PID/FID) to Varian data	302877
Single/dual BNC to Varian data	302885
Single/dual 5320 to Varian data	302893
5350 Signal (PID/ELCD) to Varian data	302901
5320 to Varian 800 MIB	320408
5360 to Varian 800 MIB	320409

PID Accessories

Product	PN
Model 4430 startup kit for Varian 3400	186973
Model 4430 startup kit for Varian 3800	305367

Heater Blocks for Varian 3400/3600 GC

OI Analytical detectors for Varian GCs require one of the heater blocks listed below.

Product	PN
Heater block A, 3400 Varian base (PID/ELCD)	253088
Heater block B, 3400 Varian base (ELCD)	253070
Heater block C, 3400 Varian base (PID)	264184
Heater block A, 3600 Varian base (PID/ELCD)	259432
Heater block B, 3600 Varian base (ELCD)	contact Varian

Please inquire about detector accessories for the new Varian 3800 GC. (Heater blocks are not required for the Varian 3800 GC.

)

Heater blocks for Varian 3400 and 3600 GCs

Varian 3400 and 3600 Configuration	A	B	C
1 ELCD or 1 XSD	✓	✓	
1 PID	✓		✓
1 PID/ELCD	✓		✓
1 PID/XSD	✓		✓
2 ELCDs or 2 XSDs		✓	
2 PIDs			✓
2 PID/ELCDs or 2 PID/XSDs			✓
1 ELCD & 1 PID	✓		
1 XSD & 1 PID	✓		
1 ELCD & 1 PID/ELCD	✓		
1 ELCD & 1 PID/XSD	✓		
1 XSD & 1 PID/ELCD	✓		
1 XSD & 1 PID/XSD	✓		
1 PID & 1 PID/ELCD			✓
1 PID & 1 PID/XSD			✓

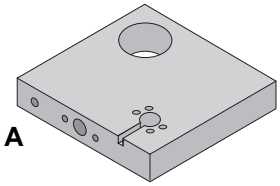

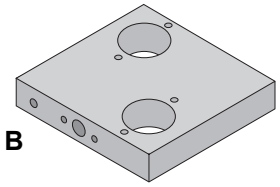

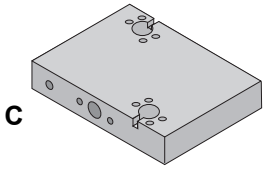

Need more information on sample preparation and pesticides analysis? Visit us at www.oico.com and download "Pesticides...from Cleanup to Analysis" (document number 0104) or call us and request a copy.

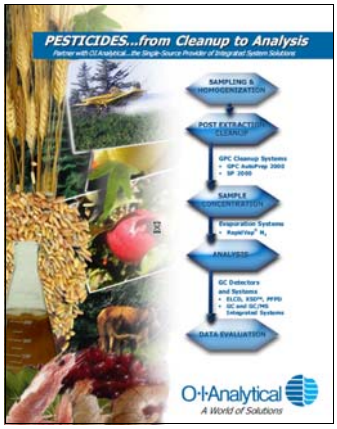

GC Analytical System Products

Since 1987, OI Analytical has provided complete gas chromatography (GC)-based solutions for numerous analytical applications. As a Premier Channel Partner with Agilent® Technologies, we offer systems incorporating our growing line of unique sample introduction and GC detector technologies into fully-integrated and application-specific systems.

We also provide system solutions for other GC platforms. Our Sales department works with other GC manufacturers to help you get the system you need.

Our applications expertise and instrumentation know-how help develop complete solutions to your most challenging analytical problems. Available systems analyze volatile organic compounds (VOC) in all matrices based on USEPA methods; pesticides by USEPA, USDA, and FDA methods; and ASTM or international regulatory groups. We also offer systems using OI Analytical's newest selective GC detectors, the Model 5380 Pulsed Flame Photometric Detector (PFPD) and the Model 5360A Halogen Specific Detector (XSD™), and Agilent GC/mass spectrometry (MS) technologies.

Let OI Analytical be the single-source solution to your complete GC system requirements.

S-PRO 3200 Series GC Sulfur Systems 38

System VOC 40

System BTEX 41

Pesticide Analysis Systems 42

Gel Permeation Chromatography Cleanup 43

RapidVap N2 Evaporation System 45

Fluorinated By-Products Analyzer 46

Custom-Designed Systems 47

S-PRO 3200 Series GC Sulfur Systems

- Integrated permeation tube oven
- Automated injection of gas or LPG samples, and calibration or check samples
- OI Volatiles Interface for low dead volume split or splitless injection
- Sulfinert-treated pathways
- Proven PFPD technology
- Single-digit ppb sulfur analysis sensitivity
- Full EPC control
- ✓ Download or request document number 1700 for more information

See document numbers 1657 and 1762 for more S-PRO system application information.

OI Analytical configures the S-PRO 3200 Series GC systems for sulfur compound analyses in both gaseous and LPG samples. These new PFPD-based systems provide low-level (ppb) sulfur analysis in a completely automated, low-maintenance GC system. The system can even generate its own S-standards using an integrated permeation tube oven. The S-PRO 3200 systems consist of a permeation tube oven, automated gas sampling valves, a specially-designed inert, low-volume split/splitless inlet, and OI Analytical's speciality sulfur detector, the PFPD. The systems use all-electronic flow control and specially-treated, highly-inert, Sulfinert™-coated sample pathways. The permeation tube oven provides extremely stable, NIST-traceable, multiple low-level sulfur standards for calibration or QC check samples. This feature eliminates costs and errors commonly associated with sulfur standards in gas cylinders.

Order permeation tube(s) separately for all systems based on specific application requirements. Specially-configured GC systems are available upon request. Data systems are sold separately.

Product	PN
S-PRO 3200 Sulfur Analysis System for automated sampling of gaseous samples. Includes Agilent 6890 GC, permeation tube chamber (with Aux EPC Module), OI Volatiles Interface, automated air-actuated, dual-valve system in a heated valve box, complete Sulfinert sample pathway, and 100-µL gas sample loop, Model 5380 PFPD, PFPD OIM flow module, dual-signal cables, AIBs, and column (installation and familiarization included in the US).	319644
S-PRO 3205 Sulfur Analysis System for manual sampling of gaseous samples. Includes Agilent 6890 GC, permeation tube chamber (with Aux EPC Module), OI Volatiles Interface, manually-operated, dual-valve system in a heated valve box, complete Sulfinert sample pathway and 100-µL gas sample loop, Model 5380 PFPD, PFPD OIM flow module, dual-signal cables, AIBs, and column (installation and familiarization included in the US).	318717
S-PRO 3210 Sulfur Analysis System for automated sampling of liquid (LPG) samples. Includes Agilent 6890 GC, permeation tube chamber (with Aux EPC Module), OI Volatiles Interface, automated air-actuated, dual-valve system in a heated valve box, complete Sulfinert sample pathway, 2-µL liquid (LPG) sample loop, Model 5380 PFPD, PFPD OIM flow module, dual-signal cables, AIBs, and column (installation and familiarization included in the US).	318725
S-PRO 3215 Sulfur Analysis System for manual sampling of liquid (LPG) samples. Includes Agilent 6890 GC, permeation tube chamber (with Aux EPC Module), OI Volatiles Interface, manually-operated, dual-valve system in a heated valve box, complete Sulfinert sample pathway, 2-µL liquid (LPG) sample loop, Model 5380 PFPD, PFPD OIM flow module, dual-signal cables, AIBs, and column (installation and familiarization included in the US).	318733

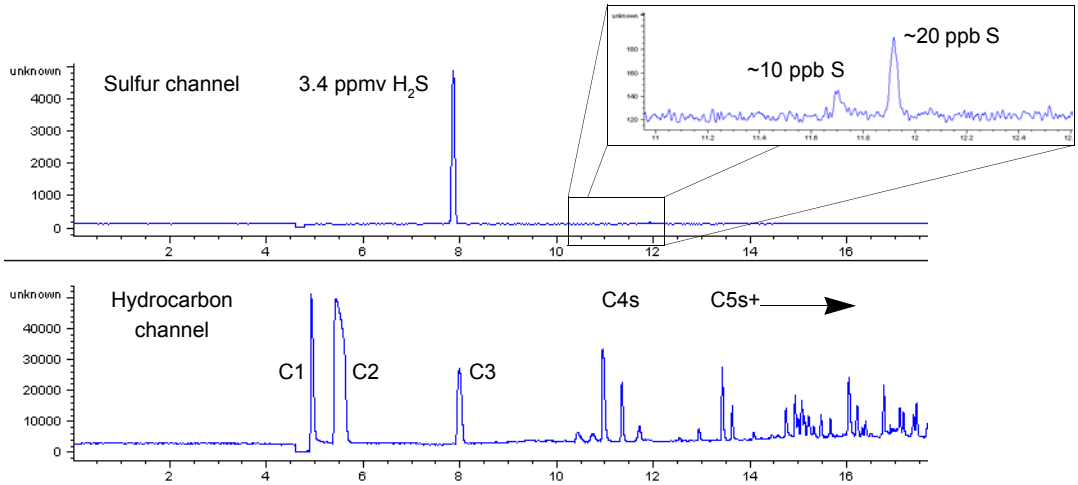

PFPD chromatogram of 3.4-ppmv H_2S and two unknown sulfur compounds in a natural gas matrix. The data were acquired on the OI Analytical S-PRO 3200 Series GC System using a 0.5-mL gas sample loop, 9:1 split ratio, Agilent GS-GasPro® column, and isothermal GC oven program.

Need more information on the S-PRO 3200 Series GC Sulfur Systems?
Visit us at www.oico.com and download "S-PRO 3200 Automated GC Systems for Sulfur Analysis" (document number 1700) or call us and request a copy.

System VOC

- Preconfigured packages include all necessary hardware
- Uses 0.45 mm I.D. capillary columns, with or without cryo-focusing
- Eclipse Sample Concentrator provides built-in patented Cyclone Water Management™, Windows CE user interface, rapid trap heating and cooling, and unique multilevel foam protection against system contamination
- Tandem PID/ELCD requires only one detector port, allowing mounting up to four detectors on one GC
- ELCD features rapid-release reactor design, quick-change disposable resin cartridges, and Ni tubes
- PID sweep gas minimizes lamp fouling and maintains system calibrations for longer times
- Principal applications include USEPA Methods 502.2, 524.2, 601,602, 624, 8020, 8021, and 8024

✓ Download or request document number 0690 for more information

The System VOC series of high-performance environmental GC systems analyzes volatile organic compounds in water, soils, and other matrices. These state-of-the-art capillary column-based systems run standard purge-and-trap methods such as USEPA Method 8020/8021, 601/602 and 502.2. A complete line of mass spectrometer-based systems for VOC analysis is also available. All MS systems comply with USEPA methods for VOC analysis by purge and trap/GC/MS, including Methods 524.2, 8024, and 624. Installation and startup using appropriate standards/methods are included in systems delivered in the U.S.

Product	PN
System VOC Analysis System with EPC (110 V) Includes Agilent 6890 GC, Eclipse Purge-and-Trap Sample Concentrator, Low-Dead-Volume Injector with PCM electronic flow control, Model 5350 Tandem PID/ELCD, VOC column, full EPC for carrier gas and detectors, factory installation and quality assurance checkout, field installation, familiarization, and extended warranty on GC detectors.	285130
VOC Squared Analysis System with EPC (110 V) Includes Agilent 6890 GC, Eclipse Purge-and-Trap Sample Concentrator, Low-Dead-Volume Injector with PCM electronic flow control, two Model 5350 Tandem PID/ELCDs, two dissimilar VOC columns, inlet column splitter, full EPC carrier gas and detectors, factory installation and quality assurance checkout, field installation, familiarization, and extended warranty on GC detectors.	292946
Dual VOC Analysis System with EPC (110 V) Includes Agilent 6890 GC, two Eclipse Purge-and-Trap Sample Concentrators, two Low-Dead-Volume Injectors with PCM electronic flow control, two Model 5350 Tandem PID/ELCDs, full EPC control on all pneumatics, two VOC columns, factory installation and quality assurance checkout, field installation, familiarization, and extended warranty on GC detectors.	292953
GC/MS VOC Analysis System with diffusion pump (110 V) Includes Agilent 6890 GC, EPC split/splitless injector with a VOC optimized injector liner, Agilent 5973N diffusion pump bundle (includes ChemStation™, computer, monitor, and printer), Eclipse Purge-and-Trap Sample Concentrator, VOC column, ion gauge controller, factory installation and quality assurance checkout, field installation, and familiarization.	316836
GC/MS VOC Analysis System with turbo pump (110 V) Includes Agilent 6890 GC, EPC split/splitless injector with a VOC optimized injector liner, Agilent 5973N turbo pump bundle (includes ChemStation, computer, monitor, and printer), Eclipse Purge-and-Trap Sample Concentrator, VOC column, ion gauge controller, factory installation and quality assurance checkout, field installation, and familiarization.	316844

Note: *For systems delivered in the USA only.* System field installation includes verification with an appropriate system standard at a five-ppb level via the sample concentrator with an OI Analytical-approved column. Operator familiarization includes basic instrument and system operation, routine maintenance procedures, and a recommendation for stocking expendable items.

Specially-configured GC systems including 220/240 VAC systems are available on request.

System BTEX

- Preconfigured packages include all necessary hardware
- Uses 0.53 mm I.D. capillary columns, with or without cryo-focusing
- Eclipse Sample Concentrator provides built-in patented Cyclone Water Management™, Windows CE user interface, rapid trap heating and cooling, and unique multilevel foam protection against system contamination
- Tandem PID/FID has excellent sensitivity and linearity
- Tandem PID/FID requires only one detector port, allowing mounting up to four detectors on one GC
- PID sweep gas minimizes lamp fouling and maintains system calibrations for longer times
- Principal applications include USEPA Methods 502, 602, and 8020, and related GRO and MA VPH methods

✓ Download or request document number 0690 for more information

The System BTEX measures volatile organic compounds in soil and water. OI Analytical configures the new Eclipse Purge-and-Trap Sample Concentrator and Model 4450 Tandem Photoionization/Flame-Ionization Detector (PID/FID) on an Agilent GC equipped with the appropriate columns (RTx-5™ column or Stabilwax® or similar). This complete system uses leading technology to analyze gasoline-range aromatic hydrocarbons. The system runs USEPA VOC methods such as 8020, 602, and 502. It also performs related gasoline range organics (GRO) and Massachusetts volatile petroleum hydrocarbons (MA VPH) methods with alternate column. Simultaneous detection with both a PID and FID provides confirmational analysis as well as basic structural information for detected compounds in a single GC analysis. Customized systems and specialized configurations to meet specific method requirements are available. Onsite installation and system familiarization are included with each System BTEX configuration package delivered in the U.S.

Product	PN
System BTEX Analysis System with EPC (110 V) Includes Agilent 6890 GC, Eclipse Purge-and-Trap Sample Concentrator, low-dead-volume injector with PCM electronic flow control, Model 4450 Tandem PID/FID, BTEX column, full EPC control for carrier gas and detectors, factory installation and quality assurance checkout, field installation, familiarization, and extended warranty on GC detectors.	292961
Two-column BTEX Analysis System with EPC (110 V) Includes Agilent 6890 GC, Eclipse Purge-and-Trap Sample Concentrator, low-dead-volume injector with PCM electronic flow, Model 4430 PID, Agilent EPC FID (Agilent Option 211), two BTEX columns, inlet splitter, full EPC control for carrier gas and detectors, factory installation and quality assurance checkout, field installation, familiarization, and extended warranty on GC detectors.	292979
Dual BTEX Analysis System with EPC (110 V) Includes Agilent 6890 GC, two Eclipse Purge-and-Trap Sample Concentrators, two low-dead-volume injectors with PCM electronic flow, two Model 4450 Tandem PID/FIDs, two BTEX columns, full EPC control for carrier gas and detectors, factory installation and quality assurance checkout, field installation, familiarization, and extended warranty on GC detectors.	292987

Note: *For systems delivered in the USA only.* System field installation includes verification with an appropriate system standard at a five-ppb level via the sample concentrator with an OI Analytical-approved column. Operator familiarization includes basic instrument and system operation, routine maintenance procedures, and a recommendation for stocking expendable items.

Specially-configured GC systems including 220/240 VAC systems are available on request.

Pesticide Analysis Systems

- Choose separate detectors for separate or simultaneous organochlorine and organophosphorus pesticide analysis
- Preconfigured packages include all necessary hardware for analysis
- Fully integrated system provides easy use and accurate results
- PFPD provides simultaneous organophosphorus and organosulfur pesticide analysis
- ELCD or XSD analyzes organochloride pesticides

✓ Download or request document number 0104 for more information

OI Analytical Pesticide Analysis Systems are high-performance GC packages developed specifically for the selective detection of organochlorine, organophosphorus, and organosulfur pesticides. These pesticide systems offer versatility in specific detection through a variety of highly-selective, single-or dual-detector combinations using OI Analytical's Pulsed Flame Photometric Detector (PFPD), Halogen Specific Detector (XSD), or Electrolytic Conductivity Detector (ELCD). OI Analytical's selective detectors in parallel with mass spectrometers offer a powerful solution for the most difficult sample matrices.

Product	PN
Pesticide Analysis System with EPC and ELCDs for dual halogen mode (110 V) Includes Agilent 6890 GC, EPC capillary split/splitless inlet (Agilent option 112), column splitter, two pesticide columns, two Model 5320 Electrolytic Conductivity Detectors (dual ELCD), two halogen mode Kits, full EPC control for carrier gas and detectors, factory installation and quality assurance checkout, field installation, familiarization, and extended warranty on GC detectors.	284943
Pesticide Analysis System with EPC and XSDs (110 V) Includes Agilent 6890 GC, EPC capillary split/splitless inlet (Agilent option 112), column splitter, two pesticide columns, two Model 5360A XSDs with vent options, full EPC control for carrier gas and detectors, factory installation and quality assurance checkout, field installation, familiarization, and extended warranty on GC detectors.	284950
Pesticide Analysis System with EPC, PFPD, and XSD (110 V) Includes Agilent 6890 GC, EPC capillary split/splitless inlet (Agilent option 112), column splitter, two pesticide columns, Model 5380 PFPD, Model 5360 XSD with vent option, full EPC control for carrier gas and detectors, factory installation and quality assurance checkout, field installation, familiarization, and extended warranty on GC detectors.	292995

Note: *For systems delivered in the USA only:* System field installation includes verification with an appropriate system standard with an OI Analytical-approved column. Operator familiarization includes basic instrument and system operation, routine maintenance procedures, and a recommendation for stocking expendable items.

Specially-configured GC systems including 220/240 VAC systems are available on request.

Need more information on sample preparation and pesticides analysis? Visit us at www.oico.com and download "Pesticides...from Cleanup to Analysis" (document number 0104) or call us and request a copy.

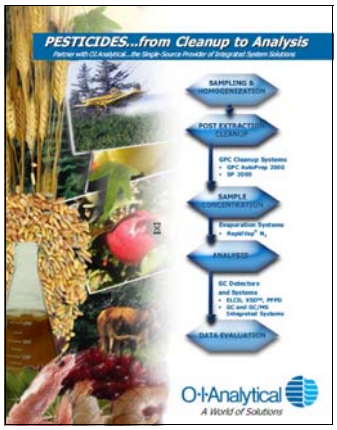

Gel Permeation Chromatography Cleanup

Gel permeation chromatography (GPC) cleanup has proven to be the most versatile and convenient sample cleanup technique for a wide range of sample matrices including foods, tissues, grains, plants, and environmental samples, such as soil, sludge, and hazardous waste. GPC cleanup is referenced in all regulatory methods including USEPA SW-846 Method 3640, the Contract Laboratory Program's Statement of Work, and the *FDA Pesticide Analytical Manual*.

GPC AutoPrep 2000

- High capacity and high efficiency column options
- Up to 60 crude residue extracts automatically cleaned
- Longer analytical column lifetime
- Automatic flow path rinse between samples to eliminate carryover contamination
- Interchangeable sample loops
- Reduced sample losses, fewer errors, and greater recoveries
- Less GC or GC/MS downtime
- Variety of sample and collection vessels

✓ Download or request document numbers 0104, 1463, and 1734 for more information

Automatically remove interfering co-extractives, such as fats, from target analytes in environmental and food samples prior to GC, GC/MS, or HPLC analysis. The GPC AutoPrep 2000 automatically cleans up to 60 samples in a single run. Choose from a wide selection of OI Analytical GPC columns to match your specific sample and matrix. With Windows®-based WinSEP™ software, the GPC AutoPrep 2000 provides flexibility and total control over the GPC cleanup process. *Column selection required. See "Gel Permeation Chromatography Cleanup Accessories" in the Sample Preparation Products Catalog.*

- WinSEP Windows-based control software with real time detector plots and extensive quality assurance package
- Run logs, password protection, and flexible reporting structure
- Diagnostics screen for easy troubleshooting

✓ Download or request document numbers 1717 and 1734 for more information

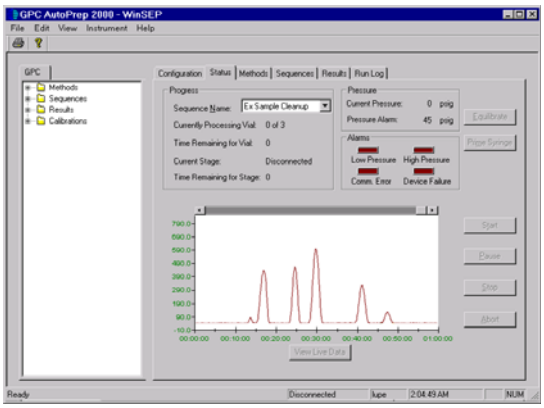

WinSEP GPC control software Status screen

- Applicable to all GPC cleanup methods
- For laboratories with smaller sample throughput
- Manual syringe sample loading to interchangeable sample loops
- Variety of column options
- Column calibration with OI Analytical's UV Detector/ Chart Recorder
- Run time, start, flow rate, and duration of collected fraction controlled directly from the easy-to-use keypad
- Less GC, GC/MS, or HPLC downtime
- Longer analytical column lifetimes

✓ Download or request document numbers 1734 and 1789 for more information

Model SP 2000

Use this simple, highly-affordable, and compact system to remove high molecular weight lipids, proteins, natural resins, cellular components, and sulfur from environmental and food samples prior to GC, GC/MS, and HPLC analysis. The SP 2000 provides a lower cost alternative to the fully-automated GPC AutoPrep 2000. It is ideal for laboratories with smaller sample throughput. *Column selection required. See "Gel Permeation Chromatography Cleanup Accessories" in the Sample Preparation Products Catalog.*

Product	PN
GPC AutoPrep 2000 (110 V)	311209
GPC AutoPrep 2000 (220 V)	311209EU
Model SP 2000	320389
UVD-1000 UV detector/chart recorder (110 V)	308837
UVD-1000 UV detector/chart recorder (220 V)	308837EU
Smart-UPS uninterruptible power supply	416-100

See the "Sample Preparation Products Catalog" for complete information on Gel Permeation Chromatography cleanup products for pesticides analysis.

RapidVap N2 Evaporation System

The RapidVap® N2 Evaporation Systems offer a more efficient, automated alternative to Kuderna-Danish and rotary evaporators and can be used with a broad range of aggressive chemicals. The RapidVap N2 Systems speeds evaporation using a nitrogen or dry gas stream blown directly downward on the sample. Apply vortex motion and dry heat to further accelerate processing. The block holds eight 450 mL samples, making it efficient for environmental and residue testing. In many GPC applications, the samples should not evaporate to dryness. The unique Cool-Zone block and tube design significantly reduce evaporation rate after achieving an end point. The Cool-Zone insulates the samples, allowing adequate time to remove the samples before they completely dry.

- Faster evaporation for greater throughput
- Maintenance-free microprocessor-controlled motor
- Teflon®-coated, corrosion-resistant aluminum sample block and chamber
- Phenol-free gasket for a positive seal without phenol contamination
- Unique Cool-Zone for processing to a desired end point
- Visual and audible alarms

✓ Download or request document number 2073 for more information

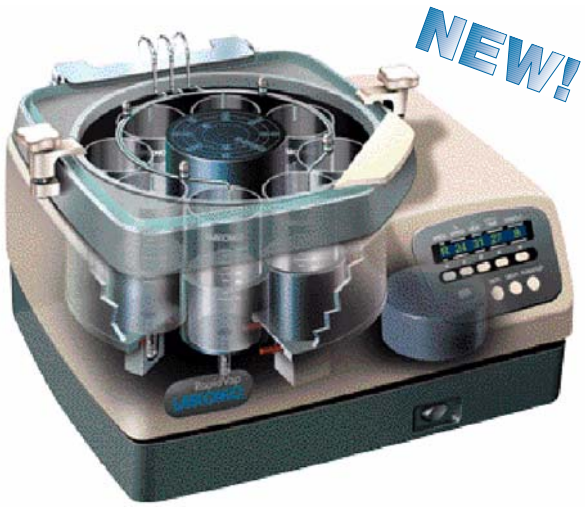

Product	PN
RapidVap N2 Evaporation System (115 V)	981-019
RapidVap N2 Evaporation System (230 V)	981-019EU
Tubes, 600 mL with1.5-mL stems (8/pk)	320940

Fluorinated By-Products Analyzer

On-line Fluorinated By-Products Analyzer

✓ Download or request document number 1120 for more information

The Fluorinated By-Products Analyzer (FBA) monitors fluorinated by-products in various petrochemical process streams such as butane or LPG. If present at elevated levels, these compounds can lead to corrosion problems and catalyst bed destruction at refineries. Capable of measuring contamination to ppb levels in only two to three minutes, this complete, automated system offers numerous advantages over the standard Wickbold method commonly used for this analysis. The FBA is available as a laboratory-based GC system or as an on-line process system.

Laboratory-Based FBA GC System

The laboratory-base FBA GC system includes an Agilent 6890 GC, EPC packed injection port, liquid gas sampling valve with all required tubing and connectors, EPC-controlled Model 5320 ELCD, fittings and column required for analysis, factory installation and quality assurance checkout, field installation, familiarization, and extended warranty on GC detectors.

On-line Process FBA

This true process FBA is a Class I Div. II-rated analyzer for installing on-line. OI Analytical designed the basic analyzer as an add-on module for an existing process analyzer used for sample handling and data processing. Custom configurations are available on request.

Product	PN
Laboratory-Based FBA System with Agilent 6890 (110 V)	293001
On-line FBA Analyzer (110 V)	300988

Note: *For systems delivered in the USA only.* System field installation includes verification with an appropriate system standard. Operator familiarization includes basic instrument and system operation, routine maintenance procedures, and a recommendation for stocking expendable items.

Custom-Designed Systems

Create your own customized GC system by adding OI Analytical components to your GC (see diagram below). We offer specific components for installing on certain GC models from the following manufacturers: Agilent Technologies, Varian®, Shimadzu®, Thermo Finnigan®, and Perkin Elmer®. Contact an OI Analytical sales representative for information on manufacturers not listed.

Purchase
Buy
Lease
Rent
Lease-to-own

Service
Extended warranty
Service contracts
Training programs
Seminars

Detectors
PID
ELCD
XSD
PFPD
PID/ELCD
PID/XSD
PID/FID
MS

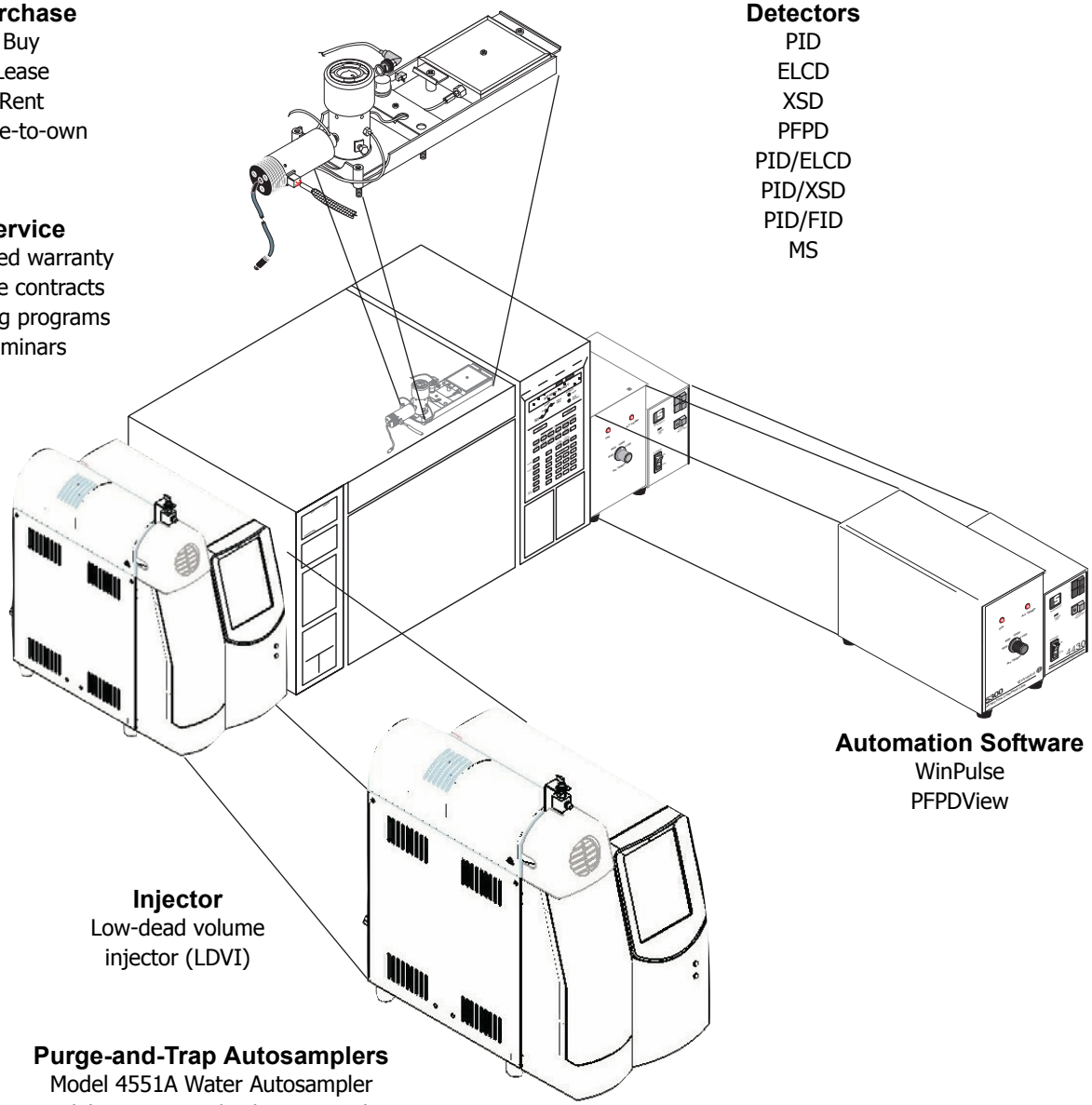

Automation Software
WinPulse
PFPDView

Injector
Low-dead volume
injector (LDVI)

Purge-and-Trap Autosamplers
Model 4551A Water Autosampler
Model 4552 Water/Soil Autosampler
Automated Multipoint Process Sampler (AMPS)

Sample Introduction
Eclipse Sample Concentrator

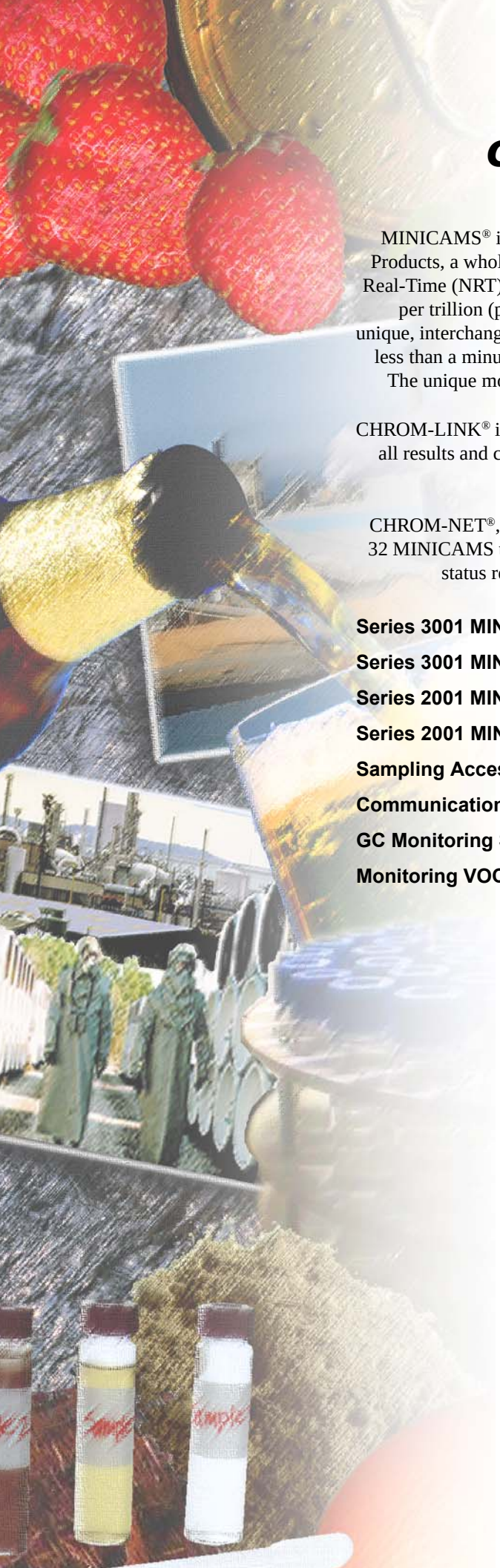

GC Monitoring System Products

MINICAMS® is a gas chromatography-based monitoring system available from CMS Field Products, a wholly-owned subsidiary of OI Analytical. The system provides automatic Near-Real-Time (NRT) monitoring of volatile organic compounds (VOCs) in air from the low parts per trillion (ppt) to parts per million (ppm) range. The heart of these systems contains the unique, interchangeable plug-in GC module. Switch the module in and out of the instrument in less than a minute, minimizing monitoring downtime for instrument maintenance or service. The unique modular design provides both flexibility in applications and easy maintenance.

CHROM-LINK® is an air-monitoring data acquisition, storage, and display package that recalls all results and chromatograms for every analysis and provides added calibration capabilities (including multilevel calibrations).

CHROM-NET®, a complete air monitoring data acquisition and reporting system, links up to 32 MINICAMS to a single host PC. CHROM-NET stores chromatograms, concentration and status reports, calibrations, and operating conditions in a database for easy retrieval.

Series 3001 MINICAMS 50

Series 3001 MINICAMS Plug-in Modules 51

Series 2001 MINICAMS 52

Series 2001 MINICAMS Plug-in GC Modules 53

Sampling Accessories 54

Communication and Monitoring Data Acquisition Accessories 55

GC Monitoring Systems Supplies and Diagnostic Tools 56

Monitoring VOCs Using the MINICAMS 57

Series 3001 MINICAMS

Series 3001 MINICAMS with FPD and vertical PCT option

The Series 3001 MINICAMS, a near-real-time air monitoring and alarm system, is designed for continuous operation, easy transport, applications flexibility, ruggedness, and reliability in both field- and fixed-site applications. The MINICAMS is a modular and extremely flexible system, easily customized for specific monitoring needs and requirements.

Product	PN
Series 3001 MINICAMS with FPD Complete monitoring system includes a plug-in GC module with a flame photometric detector (for sulfur- or phosphorus-containing compounds), solid-sorbent sample preconcentration, sample pump, compressed gas regulators, software, required cables, operator's manual, expendable supplies, and two-day orientation training at CMS for two staff members (up to a maximum of six people per customer order)	FM-3001FPD
Series 3001 MINICAMS with XSD™ Complete monitoring system includes a plug-in GC module with a halogen-specific detector (for chlorine-containing compounds), solid-sorbent sample preconcentration, sample pump, compressed gas regulators, software, required cables, operator's manual, expendable supplies, and two-day orientation training at CMS for two staff members (up to a maximum of six people per customer order).	FM-3001XSD
Series 3001 MINICAMS with PFPD Complete monitoring system includes a plug-in GC module with a pulsed flame photometric detector (for sulfur- and phosphorus-containing compounds), solid-sorbent sample preconcentration, sample pump, compressed gas regulators, software, required cables, operator's manual, expendable supplies, and two-day orientation training at CMS for two staff members (up to a maximum of six people per customer order).	FM-3001PFPD
Flame-Ionization detector Add as part of systems or as an add-on detector at a later date. CMS FID for installation onto an existing FPD.	FIO-100

Series 3001 MINICAMS Plug-in Modules

Product	PN
GC module with CMS FID Equipped with a CMS flame-ionization detector (FID), solid-sorbent sample preconcentration, column, and electronics for mounting directly into the MINICAMS chassis.	GCI-100A
GC module with FPD Equipped with a flame photometric detector (FPD), solid-sorbent sample preconcentration, column, and electronics for mounting directly into the MINICAMS chassis.	GCF-100A
GC module with FPD/FID Equipped with a CMS combination FPD/FID, solid-sorbent sample preconcentration, column, and electronics for mounting directly into the MINICAMS chassis.	GCF-100A/ FIO-100
GC module with XSD Equipped with a halogen specific detector (XSD), solid-sorbent sample preconcentration, column, and electronics for mounting directly into the MINICAMS chassis.	XSD-101
GC plug-in module with PFPD Equipped with a pulsed flame photometric detector (PFPD), solid-sorbent sample preconcentration, column, and electronics for mounting directly into the MINICAMS chassis.	GCPF-100

The standard configuration for the Series 3001 MINICAMS and plug-in GC modules includes solid-sorbent sampling and preconcentration when low parts-per-billion detection limits are required. A vertical PCT option is available. An alternative, fixed-volume loop can be used for monitoring chemical concentrations in the parts-per-million range or extremely volatile compounds that cannot be captured on a solid sorbent. Contact CMS at (205) 733-6900 or CMSSales@oico.com for details and recommendations on the most appropriate sampling configuration.

CUSTOMER CARE

CMS offers training programs customized to meet the need of the customer and the monitoring application. Training can be provided either at CMS or onsite. Contact CMS at (205) 733-6900 or CMSSales@oico.com for details.

Series 2001 MINICAMS

— Rugged, compact
— VOCs from ppm to <1 ppt
— Increased productivity

FM-2001 Continuous Monitoring System

The Series 2001 MINICAMS, a near-real-time air monitoring and alarm system, is designed for easy transport, applications flexibility, ruggedness, and reliability in both field- and fixed-site applications. Easily customize the modular and extremely flexible Series 2001 system for specific monitoring needs and requirements.

Product	PN
Series 2001 with FID Complete monitoring system includes a plug-in GC module with a flame-ionization detector (FID), solid-sorbent sample preconcentration, sample pump, software, required cables, operator's manual, expendable supplies, and two-day orientation training at CMS for two staff members (up to a maximum of six people per customer order).	FM-2001FID
Series 2001 with PID Complete monitoring system includes a plug-in GC module with a photoionization detector (PID), solid-sorbent sample preconcentration, sample pump, software, required cables, operator's manual, expendable supplies, and two-day orientation training at CMS for two staff members (up to a maximum of six people per customer order).	FM-2001PID
Flame-Ionization detector (FID) Add as part of systems or as an add-on detector at a later date. Model 5310 FID for installing onto an existing Model 5330 PID.	FID-510

Series 2001 MINICAMS Plug-in GC Modules

Product	PN
GC plug-in module with CMS FID Equipped with a CMS FID, solid-sorbent sample preconcentration, column, and electronics for mounting directly into the MINICAMS chassis.	GCI-100A
GC plug-in module with OI Analytical FID Equipped with a Model 5310 FID, solid-sorbent sample preconcentration, column, and electronics for mounting directly into the MINICAMS chassis.	GCI-510
GC plug-in module with PID Equipped with a Model 5330 PID, solid-sorbent sample preconcentration, column, and electronics for mounting directly into the MINICAMS chassis.	GCP-530
GC plug-in module with PID/FID Equipped with a tandem PID/FID, solid-sorbent sample preconcentration, column, and electronics for mounting directly into the MINICAMS chassis.	GCP-540

The standard configuration for the Series 2001 MINICAMS and plug-in GC modules includes solid-sorbent sampling and preconcentration when low parts-per-billion detection limits are required. An alternative, fixed-volume loop can be used for monitoring chemical concentrations in the parts-per-million range or extremely volatile compounds that cannot be captured on a solid sorbent. Contact CMS at (205) 733-6900 or CMSSales@oico.com for details.

CUSTOMER CARE

CMS offers training programs customized to meet the need of the customer and the monitoring application. CMS offers training either at CMS or onsite. Contact CMS at (205) 733-6900 or CMSSales@oico.com for details.

Sampling Accessories

Continuous Sampling System

Use the Continuous Sampling System (CSS) with the MINICAMS or other sorbent-based air monitoring systems to sample air continuously for volatile and semivolatile organic compounds using solid-sorbent sampling. The CSS collects air samples alternately on two sorbent tubes that are sequentially and periodically desorbed and transferred to the MINICAMS or other system for analysis. The CSS allows automated near-real-time air monitors to sample air continuously without “blind spots” and lowers detection limits by collecting larger sample volumes of air.

Product	PN
Continuous Sampling System	CSS-100
Stream Selection System, 12 ports Automatic system permits automatic sampling of up to 12 different sample points in operator-defined sequences.	SSS-121
Stream Selection System, two ports Automatic system permits automatic sampling of one or two different sample points.	SSS-021
Low-volume sampler Permits sampling of high concentration gas streams using MINICAMS configured with solid-sorbent sampling. May be operated with the Stream Selection System.	LVS-001
Thermal desorber, single tube Thermally desorbs air samples collected manually on 6- or 8-mm O.D. solid-sorbent tubes into the MINICAMS for analysis.	STD-100
Variable split sampler Special sampling device for concurrent two-line sampling. Contact CMS for additional details and relevant applications.	VSS-020B
Linear mass flowmeter Measures and monitors sample flow rates at 2 L/min (2 SLPM) air.	LMF-xxx
Mass flow controller Measures and controls sample flows, available in both 1 and 2 L/minute.	LMFC-XXX
Heated sampling lines CMS offers heated sample transfer lines in various configurations and lengths. Contact CMS for more information.	HSL-xxx

Communication and Monitoring Data Acquisition Accessories

Product	PN
CHROM-LINK Data System Air-monitoring data acquisition, storage, display, and control package that recalls all results, parameters, and chromatograms for every analysis; provides added calibration capabilities including multilevel calibrations.	CHL-100
CHROM-NET Data System A proprietary monitoring data acquisition, storage, display, and reporting package that links up to 16 MINICAMS to a single host PC. Includes computer, monitor, and data acquisition hardware including one set of cables for a single MINICAMS. Contact CMS for hardware requirements for each additional MINICAMS connection. Additional hardware expands the system to 32 MINICAMS. Contact CMS for additional details and recommendations.	CHR-100
CHROM-NET Client Server For large installations, allows linking of multiple CHROM-NET host computers into a local area network (LAN). Individual hosts transmit their MINICAMS data (analytical results and operational parameters) to a central database server through an Ethernet switch. The server can be configured to transfer concentration reports and status to a Laboratory Information System (LIMS) or other third-party system. Please call CMS Field Products for assistance with specific installation designs.	CHR-100
Converters Long range converters for use with CHROM-NET and MINICAMS to allow RS485 communications between the host PC and individual monitoring systems.	COVL-485
Process control interface Provides hard-wired connections from the MINICAMS to a facility control system providing customer-specified outputs for monitoring status, instrument mode, sample point, and agent concentration. It includes an isolated 4–20 mA output to provide concentration information and six configurable relays capable of providing normally open/normally-closed contacts for user-specified outputs.	PDAR-xxx
Status relay device Contains a 0–10 VDC output and three contact closures, configured to transmit ALARM/NO ALARM, ERROR/NO ERROR, and SAMPLE/ PURGE statuses from the MINICAMS to a programmable logic controller (PLC) or other device.	SRD-100
Monitoring status panels Multiple panels can be controlled by the CHROM-NET monitoring data acquisition and reporting package to provide the status of each sample point in the networked monitoring system. The light set (up to 20 sets) configurations are easily defined by the user for specific installations. The Master Status Panel includes an alarm horn and is capable of driving an external horn/beacon assembly. Addition of optional Slave Status Panels (ANS-100) allows use of up to 120 light sets.	ANM-100
Floppy-disk drive External floppy-disk drive enables MINICAMS monitoring reports and operating parameters to be saved directly to a floppy disk, includes enclosure.	FDD-400
Printer Includes cable, operator's manual, and ink cartridge for local logging of MINICAMS concentration reports and operating parameters.	DMP-100

GC Monitoring Systems Supplies and Diagnostic Tools

Supplies

Product	PN
Foam-lined case High-impact, plastic, foam-lined carrying case for a single system. Has compartments for operator's manual, and expendable supplies.	11475
Expendables supply kit for Series 2001 Contains a supply of most expendable items required during normal operation of the Series 2001.	ESK-200
Expendables supply kit for MINICAMS Contains a supply of most expendable items required during normal operation of the Series 3001.	ESK-300
PCTs Sample preconcentrator tubes (PCT) are available in packages of 10, 100, or 1000 tubes. Consult with CMS for proper selection of PCT based on specific application.	Specify Application
Purification kit with charcoal, molecular sieve, and indicating Drierite. One kit required for each support gas.	GPK-100
Air regulator Two-stage regulator for air cylinders.	RGA-100
Hydrogen regulator Two-stage regulator for hydrogen cylinders.	RGH-100
Nitrogen regulator Two-stage regulator for nitrogen cylinders.	RGN-100
In-line regulator In-line regulator, 0–60 psi, including fittings.	RGI-100
Regulator corral Regulator corral, including three in-line regulators and mounting bracket.	RGC-03

Repair and Diagnostic Tools

Product	PN
MINICAMS Analyzer Allows troubleshooting of electrical problems that may arise in the FM-2000 or MINICAMS.	MDD-100
Hydrogen leak detector	LKD-200
Digital flow check meter	DFM-100
Linear mass flowmeter (200 sccm air)	LMF-001
Repair parts kit Kits are customized according to the GC detector.	RPK-500
MINICAMS tool kit	MTK-050

Monitoring VOCs Using the MINICAMS

CMS Fields Products evaluated more than 100 different compounds including numerous toxic industrial compounds (TIC) as candidates for air monitoring using the MINICAMS. Several factors govern the most suitable MINICAMS configuration and selection of an appropriate monitoring method. These factors also influence the attainable monitoring levels and corresponding detection limits for the compound(s) of interest in a monitoring campaign.

Sorbent-based monitoring methods offer much higher sensitivity for a given compound than fixed-volume loop-based methods. Nonspecific detectors such as the FID offer lower sensitivity than selective detectors such as the FPD, but are applicable to a broader range of compound types. Providing suitable monitoring capability for multiple agents may dictate column, detector, and operating parameter settings that are optimized for the set of compounds, which may result in less sensitivity than is possible with a MINICAMS optimized for a single compound.

A partial list of compounds previously evaluated by CMS is provided below. For specific information on recommended MINICAMS configurations and monitoring methods for particular compounds, please contact CMS Field Products at (205) 733-6900 or CMSSales@oico.com.

Acetaldehyde	Cyclohexane	Ethylene dichloride	*n*-Pentane
Acetic anhydride	Cyclohexanone	Ethylene oxide	Perchloroethylene
Acetone	Cyclohexylamine	Freon 113	Phosgene (CG)
Acetonitrile	1,2-Dibromoethane	Glutaraldehyde	Phosphine
Acrolein	1,1-Dichloroethane	Glycidyl methacrylate	Styrene
Acrylic acid	1,2-Dichloroethane	*n*-Heptane	1,1,2,2-Tetrachloroethane
Acrylonitrile	1,1-Dichloroethylene	Hexachloro-1,3-butadiene	Tetrahydrofuran
Aniline	1,2-Dichloroethylene	Hexamethylene diisocyanate	Thiophenol
Benzene	1,2-Dichloropropane	*n*-Hexane	Toluene
Benzothiazole	1,3-Dichloropropene	Hydrogen sulfide	Toluene-2,4-diisocyanate
Benzyl chloride	Diethylenetriamine	Isoamyl acetate	1,1,1-Trichloroethane
Biphenyl (phenyl benzene)	Diethyl ether (ethyl ether)	Isopropanol	1,1,2-Trichloroethane
1-Butanol	Diethyl malonate	Methanol	Trichloroethylene
Butyl acrylate	Diisopropyl methylphosphonate	2-Methoxyethanol	1,2,3-Trichloropropane
n-Butylacetate	Dimethyl disulfide	Methyl acrylate	Tridecane
n-Butyl sulfide	*N,N*-Dimethyl formamide	Methyl bromide	Triethyl phosphate
Carbon disulfide	Dimethyl methylphosphonate	Methylene chloride	Triethyl phosphite
Carbon tetrachloride	Dimethyl sulfate	Methyl ethyl ketone	1,3,5-Trimethylbenzene
Cellosolve acetate	Dimethyl sulfide	Methyl isobutyl ketone	Tripropyl phosphate
Chlorobenzene	Diphenyl ether	Methyl mercaptan	Vinyl acetate
tris(2-Chloroethyl) amine	Epichlorohydrin	Methyl salicylate	Vinyl chloride
bis(2-Chloroethyl) ether	Ethanol	Naphthalene	Xylenes
bis(2-Chloroethyl) ethyl amine	Ethyl acetate	Nicotene	*o*-Xylene
Chloroethyl ethyl sulfide	Ethyl acrylate	Nitrobenzene	*p*-Xylene
Chloroform	Ethyl benzene	*m*-Nitrotoluene	
Chloropicrin	Ethyl chloride	*n*-Octane	
Cyanogen chloride	Ethyl lactate	Pentadecane	

GC Sample Introduction Replacement Parts and Supplies

How to order

OI Analytical makes ordering easier than ever. Order by mail, telephone, fax, or e-mail.*

Mail: OI Analytical
Order Entry Department
P.O. Box 9010
College Station, TX 77842-9010

Phone: (800) 673-3750
(979) 690-1711

Fax: (979) 690-0440

E-mail: orders@oico.com

When ordering, please provide the following:

- Contact name, company name, account number, shipping and billing addresses, and telephone number(s).
- Your company's purchase order number or credit card number (Visa, MasterCard, AMEX).
- OI Analytical part number, description, and quantity of item(s) ordered.
- Tax exemption number (if applicable).

* International customers should contact the OI Analytical distributor in their area. For a list of distributors, visit our website at ***www.oico.com***. If a distributor is not available, contact OI Analytical International Sales directly at (979) 690-1711 for distributor information.

Eclipse Sample Concentrator Replacement Parts and Supplies 60
Model 4560 Sample Concentrator Replacement Parts and Supplies 66
Model 4551A Water Autosampler Replacement Parts and Supplies 71
Model 4551 Water Autosampler Replacement Parts and Supplies 74
Standards Addition Module (SAM) Replacement Parts and Supplies 77
Model 4552 Water/Soil Autosampler Replacement Parts and Supplies 78
DPM-16 Autosampler Replacement Parts and Supplies 85
Air Analysis Products Replacement Parts and Supplies 88
Cryo-Focusing Module (CFM) Replacement Parts and Supplies 89
Low-Dead-Volume Injector (LDVI) Replacement Parts and Supplies 91
Cable Selection Guide 94
Glassware Selection Guide 95
Purge Needle Selection Guide 96

Eclipse Sample Concentrator Replacement Parts and Supplies

Assemblies–Eclipse

Product	Unit	PN
DC actuator assembly	each	321175
Fan assembly for Eclipse water management and trap	each	321014
Thermocouple I/O board service kit	each	321922
Main PIC board with fuses service kit	each	321921
Pressure regulator	each	306886
Pressure transducer assembly	each	320670
Purge gas flow controller	each	228015
Sparge cover assembly	each	321097
Sparge mount bracket	each	320600
Sparge mount cover assembly	each	321083
Sparge mount manifold, standard (not for Foam Buster option)	each	320581
Trap cover	each	320704
Trap transformer assembly	each	320590
Valve oven cover assembly	each	321586

Customer Communications

Have a question about our instruments or an application? Call us about onsite specific applications training and hands-on seminars. Call us at our toll-free technical support hotline (800) 336-1711.

Cables–Eclipse

Product	Unit	PN
“H” cable for Agilent 6890N/6850 for starting additional external device on same GC	each	300954
Ethernet cable (Eclipse to network)	each	321902
Ethernet twisted pair cable (Eclipse to PC)	each	321901
Handshake pigtail cable for Agilent 5890/4890	each	185868
Handshake pigtail cable for Agilent 5970 (RTE-A)	each	209882
Handshake pigtail cable for Agilent 5970/5972MS (Pascal)	each	209866
Handshake pigtail cable for Agilent 6890A/6890MS	each	252213
Handshake pigtail cable for Agilent 6890N/6890A/6890MS/6850	each	252213
Handshake cable for Eclipse to Model 4552	each	284935
Handshake pigtail cable for Shimadzu 17A	each	244483
Handshake pigtail cable for Thermo Finnigan Trace GC†	each	319822
Handshake pigtail cable for Varian 3400	each	188409
Handshake pigtail cable for Varian 3800/3900	each	300368
Handshake pigtail cable to spade lugs	each	285924
System interface cable for P&T	each	226530

†Must order Thermo Finnigan kit to interface to split/splitless injectors (PN 119245-0001).

Ferrules and Fittings–Eclipse

Product	Size	Unit	PN
Bulkhead fitting, stainless steel	1⁄16" female x 1⁄8 male out	each	199513
Cable clamp, p-clip, for transfer line strain relief	0.562	each	321169
Clip for holding stylus to unit		each	A303-0709-00
Cross fitting, Silcosteel	1⁄16"	each	321103S
Ferrule, oversized, TFE/glass-filled, for frosted-glass vessel	18 mm	10/pk	321743
Ferrule, standard, TFE/glass-filled	18 mm	10/pk	224352
Ferrule, TFE	6 mm tube	each	224337
Ferrule, Tefzel, flangeless	1⁄16"	5/pk	322248
Fitting adapter, brass/nickel	10-32 x 1⁄16" hose	each	202077
Nut, female, brass	1⁄8	each	128108
Nut, extended, stainless steel	1⁄16" male	each	217802
Nut, hex, stainless steel, for trap bulkhead	5⁄16-20	each	228981
Nut, hex, stainless steel, for water management fitting	7⁄16-20	each	225474
Nut, PEEK	1⁄16 x 1⁄4-28	each	322231
Nut, PEEK, with flangeless ferrule, Tefzel	1⁄16 x 1⁄4-28	5/pk	322247
Plug fitting, brass/nickel	10-32 O-ring	each	177502
Plug fitting, nickel plated		each	217711NI
Screw, Phillips oval head, stainless steel	4-40 x 1⁄4	each	179457
Screw, socket head cap, stainless steel	6-32 x 1⁄2	each	197830
Screw, socket head cap, stainless steel,	4-40 x 3⁄8	each	183319
Spring clip for drain tube		each	321579
Trap bulkhead fitting		each	320580
Union, male, brass	1⁄4-1⁄16	each	227223
Union, bulkhead, female, stainless steel	1⁄16	each	175829
Union, female, stainless steel	1⁄16 tube	each	187161

Ferrules and Fittings–Eclipse

Product	Size	Unit	PN
Washer, star, external, stainless steel, for trap bulkhead fitting	5⁄16	each	250084
Washer, star, external, stainless steel, for water management fitting	7⁄16	each	250092
Water management fitting		each	321596

Fuses–Eclipse

Product	Size	Unit	PN
Fuse holder cap		each	320978
Fuse, 0.80 A, Fast-Blo	5 x 20 mm	each	320995
Fuse, 1.25 A, Fast-Blo	5 x 20 mm	each	320994
Fuse, 1.6 A, Fast-Blo	5 x 20 mm	each	321749
Fuse, 2.50 A, Slo-Blo	5 x 20 mm	each	320996
Fuse, 5 A, Fast-Blo	5 x 20 mm	each	321672
Fuse, 6.3 A, Slo-Blo	5 x 20 mm	each	249177

Heaters and Thermocouples–Eclipse

Product	Unit	PN
Heater and thermocouple assembly for Foam Buster option (not voltage specific)	each	321484
Heater assembly for sparge mount, 115 V	each	320637
Heater assembly for sparge mount, 230 V	each	321150
Heater assembly for valve oven, 115 V	each	321003
Heater assembly for valve oven, 230 V	each	321149
Heater assembly for water management, 115 V	each	321015
Heater assembly for water management, 240 V	each	321454
Thermocouple assembly for sample heater option	each	321005
Thermocouple assembly for sparge mount	each	321025
Thermocouple assembly for valve oven	each	321006
Thermocouple assembly for water management	each	321004

Miscellaneous–Eclipse

Product	Unit	PN
Eclipse operator's manual and software	each	321604
Eclipse startup kit	each	321603
P&T detector standard kit	each	222919
Power cord, 125 V 10 A for North America	each	116038
Touchscreen stylus	each	321585
Heated transfer line, blank, 115 V, 48"	each	321145
Heated transfer line, blank, 115 V, 60"	each	321146
Heated transfer line, blank, 230 V, 48"	each	321147
Heated transfer line, blank, 230 V, 60"	each	321148

Modules–Eclipse

Product	Unit	PN
Eclipse electronics module with touchscreen (115 V)	each	321091
Eclipse electronics module with touchscreen (230 V)	each	321618
Eclipse electronics module without touchscreen (115 V)	each	321747
Eclipse electronics module without touchscreen (230 V)	each	321748
Eclipse pneumatics module (115 V)	each	321090
Eclipse pneumatics module (230 V)	each	321619

Spargers and Accessories–Eclipse

Product	Size	Unit	PN
Ferrule, oversized, TFE/glass-filled, for frosted glass vessel	18 mm	10/pk	321743
Ferrule, standard, TFE/glass-filled	18 mm	10/pk	224352
Ferrule, TFE	6 mm tube	each	224337
Frit sparger, swage inlet	5 mL, 18 mm neck O.D.	each	321478
Frit sparger, swage inlet	25 mL, 18 mm neck O.D.	each	321479
Frosted frit sparger, swage inlet	5 mL, 18 mm neck O.D.	each	321080
Frosted frit sparger, swage inlet	25 mL; 18 mm neck O.D.	each	321081
Frosted needle sparger	5 mL	each	321696
Frosted needle sparger	25 mL	each	321697
Sample needle for frit sparger		each	321035
Sample needle for frit sparging with Foam Buster option		each	321475
Sample needle for needle sparger		each	321651
Sample needle for needle sparger with Foam Buster option		each	321700
Sparger wrench	1 ⅛" OE	each	227975

Support and Maintenance Kits–Eclipse

Product	Unit	PN
One-year parts and supplies kit for Eclipse	each	321037
Starter and support kit for Eclipse	each	228056
Interface kit, Eclipse to Model 4552	each	321728
Complete sample pathway refurbishing kit (not Foam Buster)	each	322230
Sample pathway preventive maintenance kit (not Foam Buster)	each	322233
Needle sparge hardware kit	each	321615

Traps–Eclipse

Product	Unit	PN
#0 Trap, blank (no sorbent)	each	228114
#7 Trap, Tenax only	each	227348
#8 Trap, Tenax/silica gel	each	227363
#9 Trap, Tenax/silica gel/charcoal	each	219972
#10 Trap, Tenax/silica gel/carbon molecular sieve	each	228122
#11 Trap, VOCARB® 3000	each	258830
#12 Trap, BTEX (Carbopack B/ Carbopack C)	each	258848

Tube Assemblies and Tubing–Eclipse

Product	Size	Unit	PN
Tube assembly for carrier in to six-port valve 4		each	321037
Tube assembly for Eclipse six-port valve 1 to cross 4		each	321047
Tube assembly for external drain		each	321476
Tube assembly for six-port valve 2 to water management fitting		each	321048
Tube assembly, cross 1 to valve A		each	321101
Tube assembly, sparge mount to filter		each	321932
Tube assembly, six-port valve 5 to trap bulkhead fitting		each	321046
Tube assembly, TFE, drain line		each	321691
Tube assembly, transfer line	4 feet	each	321692
Tube assembly, transfer line	5 feet	each	321693
Tube assembly, vent plug		each	248864
Tubing, copper, cleaned	⅛ x 0.070 I.D.	foot	111427
Tubing, stainless steel	1⁄16 x 0.030 I.D.	inch	193409
Tubing, urethane, clear	⅛ x 1⁄16 I.D.	foot	166224

Valves and Accessories–Eclipse

Product	Size	Unit	PN
Check valve, brass/ nickel, 0.5 psi	10-32	each	321602
Drain valve assembly, 12V		each	321010
Four-port injection valve, KEL-F		each	321100
O-ring with mesh for valve PN 320594		each	321906
Sample valve mounting bracket		each	321079
Six-port valve, stainless steel	1⁄16"	each	321578
Three-port injection valve, KEL-F	¼-28	each	169484
Three-way dry purge valve “B”		each	289546
Three-way isolation valve “A and C” (bake vent and backflush valve)		each	320594
Two-way manifold valve “F”, brass/ nickel, Viton, 12 V, for purge gas		each	315234
Valve manifold assembly		each	321174

O·I·Analytical FINANCING

We offer several finance programs for your convenience. Renting and leasing programs as well as our rent-to-own program allow you to get the equipment you need. Call and ask for details at (800) 653-1711.

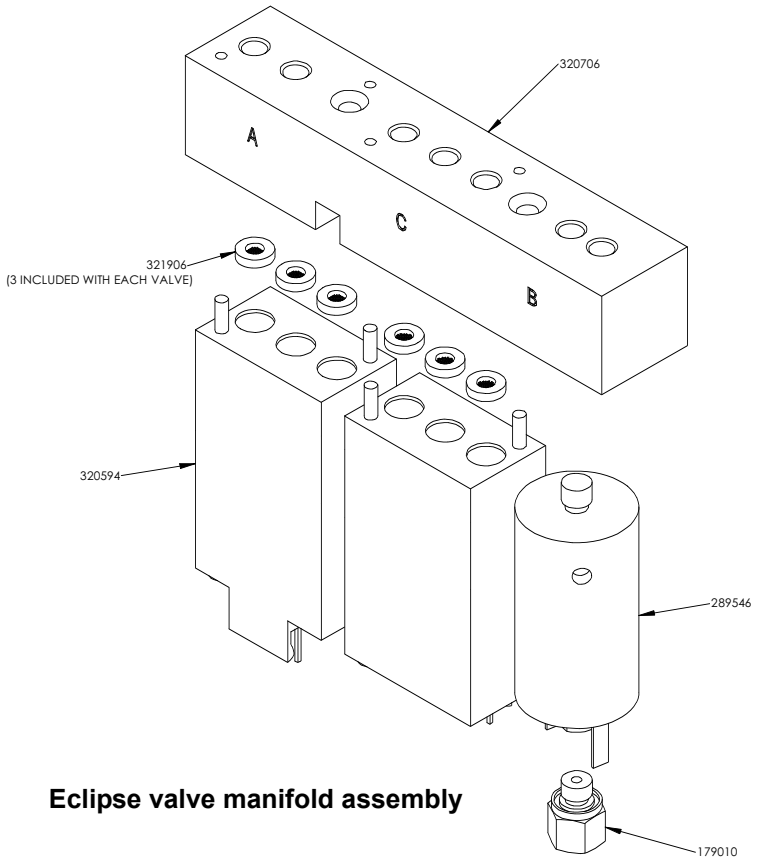

Eclipse valve manifold assembly

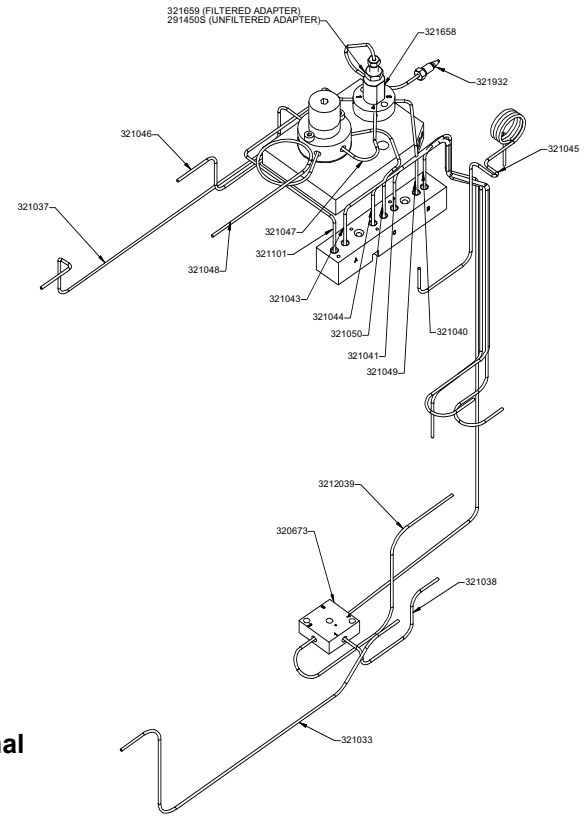

Eclipse internal plumbing

Infra-Sparge Sample Heater Option Replacement Parts

Product	Unit	PN
Door interlock magnetic cable	each	321134
Infra-Sparge lamp for Eclipse, 120 V, 300 W	each	321451
Infra-Sparge lamp for Eclipse, 230 V, 250 W	each	321452
Lamp cover assembly w/ filter	each	321736
Sample thermocouple assembly	each	321005
Sockets	2/pk	225664
Visible light filter	each	227173

Foam Buster Option Replacement Parts

Product	Size	Unit	PN
Block for Foam Buster		each	321125
Ferrule, Tefzel, flangeless	1⁄16"	5/pk	322248
Ferrule, Tefzel, flangeless	3 mm	each	321678
Ferrule, TFE	1⁄16 tube	each	177626
Ferrule, TFE	6 mm tube	each	224337
Fitting nut for Foam Buster needle, PEEK	1⁄16 x 1⁄4-28	each	322237
Fitting, stainless steel for Foam Buster heater	1⁄4-28 x 8 x 0.7	each	321469
Heater/sensor assembly for Foam Buster		each	321484
Sample needle for Foam Buster, frit sparging		each	321475
Sample needle w/ sidehole, needle sparging		each	321700
Set screw SOC stainless steel, CUP	4-40 x 1⁄8	each	131953
Sparge mount manifold for Foam Buster		each	320724

Sparge Overfill Sensor (SOS) Option Replacement Parts

Product	Size	Unit	PN
Bushing, snap	3⁄8" hole x 0.188" I.D.	each	321170
Compression spring, stainless steel	0.240 x 0.75	each	321580
SOS assembly		each	321488
SOS shield		each	321589
Standoff, brass, female/female	4-40 x 1.00	each	321171
Thumbscrew, brass/ nickel	4-40 x 1⁄4	each	230938
Screwdriver for SOS adjustment	1.4 mm	each	321599

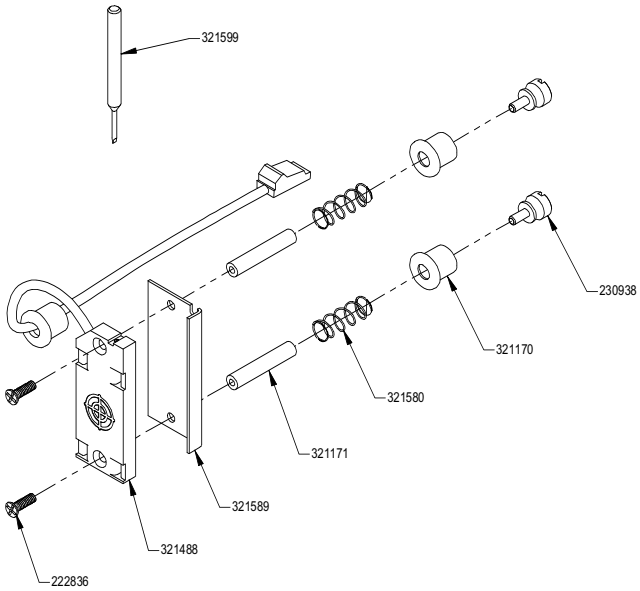

Sparge Overfill Sensor

Model 4560 Sample Concentrator Replacement Parts and Supplies

Cables–Model 4560

Product	Unit	PN
Cable for Model 4560 to any handshake pigtail cable	each	226530
Cable for Model 4560 to CFM	each	226548
Cable for Model 4560 to DPM-16, MPM-16, or MHC-16	each	226605
Cable for Shimadzu 17AGC	each	244483
Handshake pigtail cable for Agilent 5890 (MSD interface below)	each	185868
Handshake pigtail cable for Agilent 6890	each	252213
Handshake pigtail cable for Varian 3400/3600	each	188409
Handshake pigtail cable for Varian 3800	each	300368
Handshake pigtail cable to spade lugs	each	285924
RS-232-C cable (WinTrap *Plus*)	each	226621
H-remote start cable for Agilent 6890/6850	each	300954

Note: For appropriate cables for various instrument configurations, see “Cable Selection Guide” on page 94.

Cables for MSD Interface–Model 4560

Product	Unit	PN
Handshake pigtail cable for Agilent 5971 or 5972 (DOS or UNIX)	each	209874
Handshake pigtail cable for Agilent 5970 (RTE-A)	each	209882
Handshake pigtail cable for Agilent 5971 (PASCAL)	each	209866

Ferrules and Fittings–Model 4560

Product	Size	Unit	PN
Drain tube adapter assembly		each	234393
Ferrule for sparger inlet arm, Teflon	6 mm tube	each	224337
Ferrule, reverse, Teflon	1/16" tube	5/pk	272443
Ferrule, Teflon	1/16" tube	5/pk	196220
Ferrule, Teflon	18 mm tube	10/pk	224352
Ferrule, Vespel®	1/8"-1/16" tube	each	247882
Nut, female	18 mm	each	224675
Nut, knurled stainless steel, male	1/16"	each	217240
Sparge filter assembly for Model 4560/4551A/AMPS		each	209254
Sparge mount fitting		each	224600
Syringe port adapter, KEL-F, female, Luer-Lok	10-32	each	224584
Union bulkhead fitting for trap bulkhead		each	209098
Union for sparge inlet arm, brass, male	1/4"-1/16"	each	227223
Water management assembly		each	248062
Water management fitting		each	252874

Heaters and Thermocouples–Model 4560

Product	Unit	PN
Sample heater thermocouple assembly	each	234112
Sparge mount heater and thermocouple kit, 120 V	each	311738
Sparge mount heater and thermocouple kit, 240 V	each	310995
Sparge mount/water management heater cable, 110 V	each	233700
Sparge mount/water management heater cable, 220 V	each	242552
Valve manifold heater cable, 110 V	each	233718
Valve manifold heater cable, 220 V	each	242529
Valve manifold thermocouple	each	225516
Valve oven/sparge mount thermocouple assembly	each	227314
Valve/oven heater cable, 110 V	each	227157
Valve/oven heater cable, 220 V	each	242503
Water management thermocouple	each	317453

Infra-Sparge Sample Heater Parts–Model 4560

Product	Unit	PN
Lamp cover assembly	each	230060
Sample heater lamp for Model 4560, 120 V	each	225656
Sample heater lamp for Model 4560, 220 V	each	242479
Sample heater thermocouple assembly	each	234112
Sparge door assembly	each	230052

Miscellaneous Parts–Model 4560

Product	Unit	PN
Backup battery, 3.6 V	each	211953
CPU board for Model 4560	each	228098
Firmware EPROM w/ instructions for Model 4560	each	254870
Fuse, 6.3 amp Slo-Blo	each	249177
Fuse, 4.0 amp Fast Blo	each	228536
Fuse, 3.0 amp Fast Blo	each	228510

Miscellaneous Parts–Model 4560

Product	Unit	PN
Fuse, 3.15 amp Slo-Blo	each	257329
Model 4560 one year supplies kit	each	254714
Model 4560 operator's manual	each	227959
Mud-Dawg	each	215061
Sparger wrench, 1⅛" open end	each	227975

Needles–Model 4560

Product	Size	Unit	PN
Frit sparger	22.9 cm	each	209114
Frit/needle sparger	19.6 cm	each	203042
Needle sparger w/ side hole	22.9 cm	each	227371

Note: For appropriate needles for Model 4560 configurations, see "Purge Needle Selection Guide" on page 96.

Download the latest product and applications information at www.oico.com.

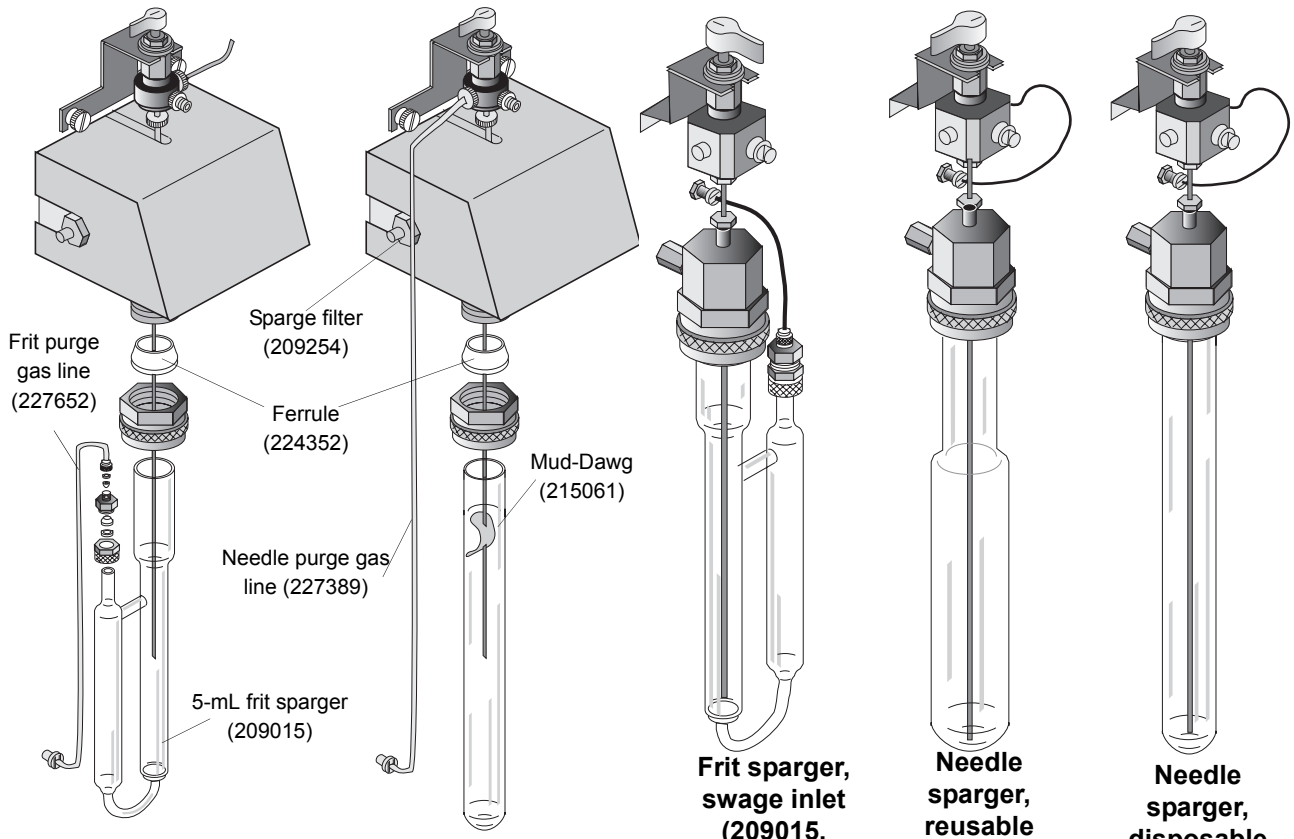

Sparge vessel assemblies

Frit sparger, swage inlet (209015, 209031)

Needle sparger, reusable (225623, 225631)

Needle sparger, disposable (199521)

Spargers and Accessories–Model 4560

Product	Size	Unit	PN
Frit sparger, swage inlet	5 mL; 18 mm neck O.D.	each	209015
Frit sparger, swage inlet	25 mL; 18 mm neck O.D.	each	209031
Needle sparger hardware kit (no glassware)		each	227397
Needle sparger, disposable	10 mL; 18 mm neck O.D.	125/ case	199521
Needle sparger, swage inlet	5 mL; 18 mm neck O.D.	each	225623
Needle sparger, swage inlet	25 mL; 18 mm neck O.D.	each	225631
One-year supply kit for Model 4560		each	254714

Note: For sparger kits, see “Sparger Kits*–DPM-16” on page 87.

Syringes–Model 4560

Product	Size	Unit	PN
Sample syringe w/ Luer-Lok	5 mL	each	177659
Sample syringe w/ Luer-Lok	25 mL	each	172461
Syringe	10 µL x 2" needle	each	167545

Transfer Lines–Model 4560

Product	Size	Unit	PN
Transfer line, 120 V	48"	each	249185
Transfer line, 240 V	48"	each	249466
Transfer line, 120 V	60"	each	249490
Transfer line, 240 V	60"	each	249508

Traps–Model 4560

Product	Unit	PN
#0 Trap, blank (no sorbent)	each	228114
#7 Trap, Tenax® only	each	227348
#8 Trap, Tenax/silica gel	each	227363
#9 Trap, Tenax/silica gel/ charcoal	each	219972
#10 Trap, Tenax/silica gel/carbon molecular sieve	each	228122
#11 Trap, VOCARB® 3000	each	258830
#12 Trap, BTEX (Carbopack B/ Carbopack C)	each	258848
MicroTrap “A" Carboxen 1000 kit	each	291435
MicroTrap "B" Carbosieve kit	each	291443
MicroTrap "A" Carboxen 1000 replacement trap	each	283549
MicroTrap "B" Carbosieve replacement trap	each	287649

Tube Assemblies–Model 4560

Product	Unit	PN
Carrier gas FC six-port valve tube assembly for 1⅝" diameter regulator	each	307157
Carrier gas inlet six-port valve tube assembly	each	233999
Purge bulkhead/regulator tube assembly for 1⅝" diameter regulator	each	307116
Purge FC out/solenoid manifold tube assembly	each	227611
Purge gas/frit sparger tube assembly	each	227652
Purge gas/needle sparger tube assembly	each	227389
Purge out/gauge tube assembly	each	227603
Regulator in carrier gas FC in Model 4560 tube assembly for 1⅝" diameter	each	307124
Regulator out to purge gas FC tube assembly for 1⅝" diameter	each	307132
Regulator out/solenoid manifold tube assembly for 1⅝" diameter	each	307108
Six-port valve/sparge manifold tube assembly	each	227645
Solenoid manifold/purge valve tube assembly	each	247700
Solenoid manifold/six-port valve tube assembly	each	227447
Trap/six-port valve tube assembly	each	227637
Valve solenoid/sparge manifold tube assembly	each	228957

Tube Assemblies–Model 4560

Product	Unit	PN
Water management/six-port valve tube assembly	each	227439
Pressure regulator upgrade kit to upgrade regulator and tubing to 1⅝" diameter regulator	each	307546

Tubing–Model 4560

Product	Size	Unit	PN
Copper tubing, cleaned	⅛" x 0.070 mm I.D.	foot	111427
Silicone tubing, clear (drain valve adapter)	3⁄32" x 3⁄32" I.D.	foot	179044
Silicone tubing, clear (drain valve)	⅛" x 1⁄16" I.D.	foot	179812
Urethane tubing, clear	⅛" x 1⁄16" I.D.	foot	166224

Valves–Model 4560

Product	Unit	PN
Check valve, 0.5 psi, 10-32	each	218928
Drain valve (pinch valve)	each	207761
Four-port sample valve, 10-32, KEL-F	each	237180
Six-port valve w/ actuator	each	249524
Six-port valve w/ linkage (no actuator), stainless steel	each	248575
Three-port sample valve, 10-32, KEL-F	each	218982
Three-way manifold valve, 12 V	each	289546

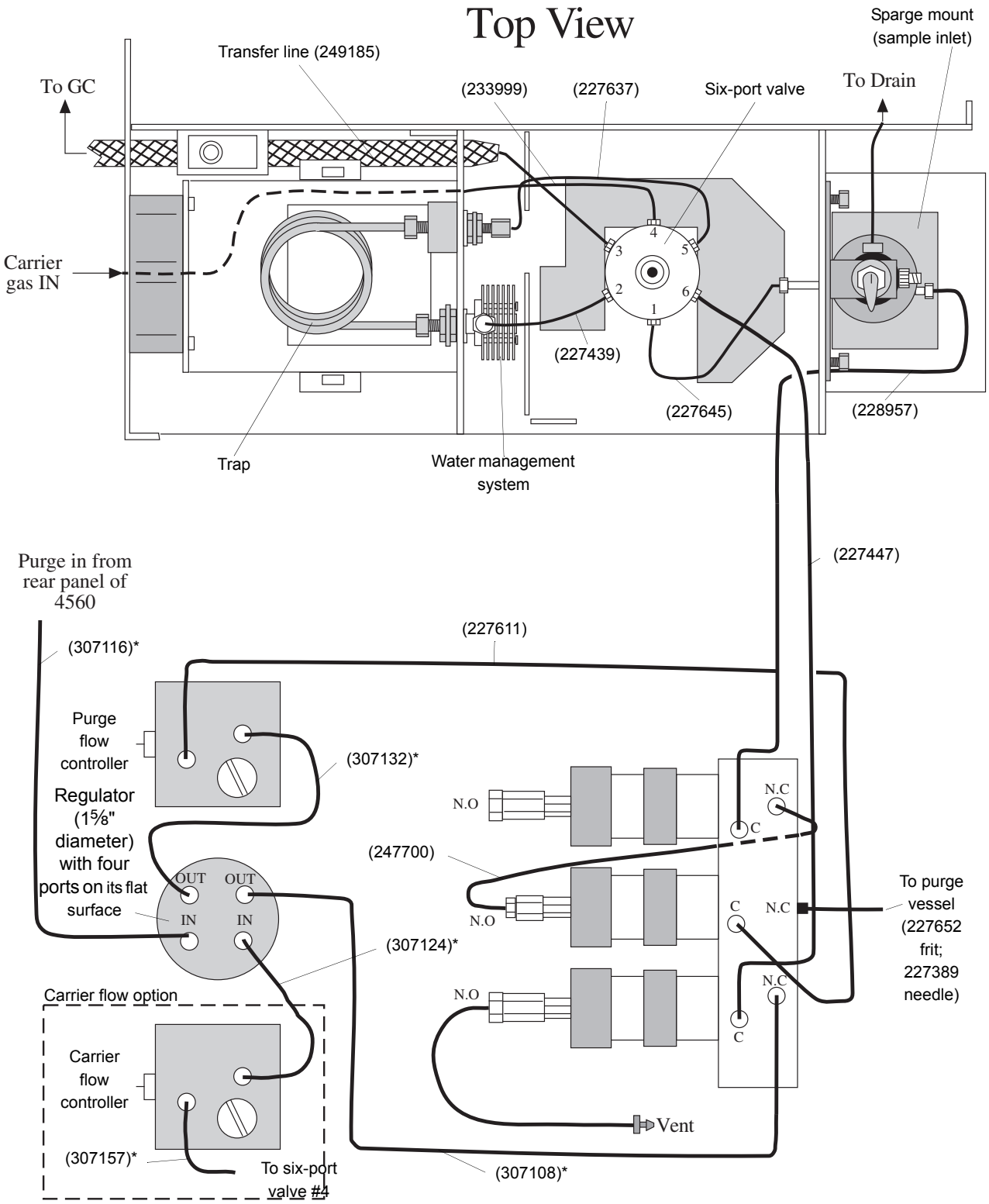

Plumbing schematic for Model 4560

*Units with serial numbers beginning with "K" or lower need to upgrade with the pressure regulator upgrade kit (PN 307546).

Model 4551A Water Autosampler Replacement Parts and Supplies

Fittings–Model 4551A

Product	Size	Unit	PN
Adapter	⅛" hose x 1⁄16"	each	178434
Adapter, brass	⅛"	each	166208
Bulkhead fitting, stainless steel	⅛" x ⅛"	each	285189
Coupling, TFE	¼-28	each	166274
Cross swivel, brass/ nickel	10⁄32	each	179499
Nut, polypropylene, Cheminert	⅛" x ¼-28	each	284729
Nut, female, stainless steel	¼"	each	169682
Nut, male, stainless steel	1⁄16"	each	223057
Nut, polypropylene	¼-28, ⅛" tube	each	263764
Nut, stainless steel spring	1⁄16"	each	248757
Plug, brass/nickel	10⁄32 O-ring	each	177502
Tee, polypropylene	⅛"	each	279125
Union, stainless steel	6 mm x 1⁄16" tube	each	261313
Union, stainless steel	1⁄16"	each	294025

Glassware–Model 4551A

Product	Size	Unit	PN
Caps, open hole	for 40-mL vials	72/pk	296079
Reagent water bottle assembly		each	248915
Septa, silicon, Teflon faced	for 40-mL vials	72/pk	296061
Vial, wash/waste station		each	232801
VOA vial kit	40-mL vials w/ caps and septa	72/kit	296053

Miscellaneous Parts–Model 4551A

Product	Size	Unit	PN
Bushing, PEEK, Cheminert	⅛"	each	284828
Cable, BNC to BNC for Model 4560	3 ft.	each	235515
Cable, Eclipse to 4551A		each	321133
Carousel cover		each	321785
Check valve, polypropylene		each	182238
Door, 4560 for 4551A		each	257428
Ferrule, brass tube	1⁄16"	each	228049
Ferrule, PFA Cheminert	⅛"	each	284844
Ferrule, stainless steel tube	⅛"	each	227207
Ferrule, Teflon tube	6 mm	each	224337
Ferrule, Tefzel tube	1⁄16"	each	270199
Ferrule, Tefzel® tube	⅛"	each	263756
Firmware for Model 4551A (latest revision)		each	315945
Fuse, 2 amp, 250 V Slo-Blo		each	177453
Loop cover		each	257451
Main board		each	278101
Model 4551A operator's manual		each	310565
Needle drive assembly		each	282707
Needle drive cover		each	253518
Peristaltic sample pump assembly		each	263442
Power cord for North America, 110 V		each	116038
Pressure regulator, 0-60 psi gauge		each	282251
Pressure switch		each	270173
Reagent water pump, 24 V		each	296160
Sample filter assembly		each	248047
Sample loop	5 mL	each	261339
Sample loop	25 mL	each	259507
Sample tray assembly		each	234815
Septum piercing needle w/ ferrule attached		each	256610
Six-port valve assembly		each	293605
Three-way solenoid valve		each	282756
Transfer gas needle sleeve w/ nut and ferrule attached		each	256628
Upgrade kit for Eclipse operation		each	321608

Needle Drive Assembly Parts (see drawing)–Model 4551A

Product	Size	Unit	PN
Ferrule, brass tube	1⁄16"	each	228049
Ferrule, Tefzel tube	1⁄16"	each	270199
Sample filter assembly		each	248047
Needle manifold		each	238790
Septum piercing needle w/ferrule attached		each	256610
Transfer gas needle sleeve w/ nut and ferrule attached		each	256628
Nut, brass/nickel hose	1⁄16"	each	202077
Nut, male, stainless steel	1⁄16"	each	223057
Nut, stainless steel spring	1⁄16"	each	248757
Nut, polypropylene	1⁄4-28 x 1⁄16"	each	309435
Spring, stainless steel	0.125 O.D.	each	248765
PEEK tubing	1⁄16" x 0.040"	inch	206193
Urethane tubing, blue	1⁄8" O.D.	foot	282863
Union, male fitting	1⁄16"	each	294025

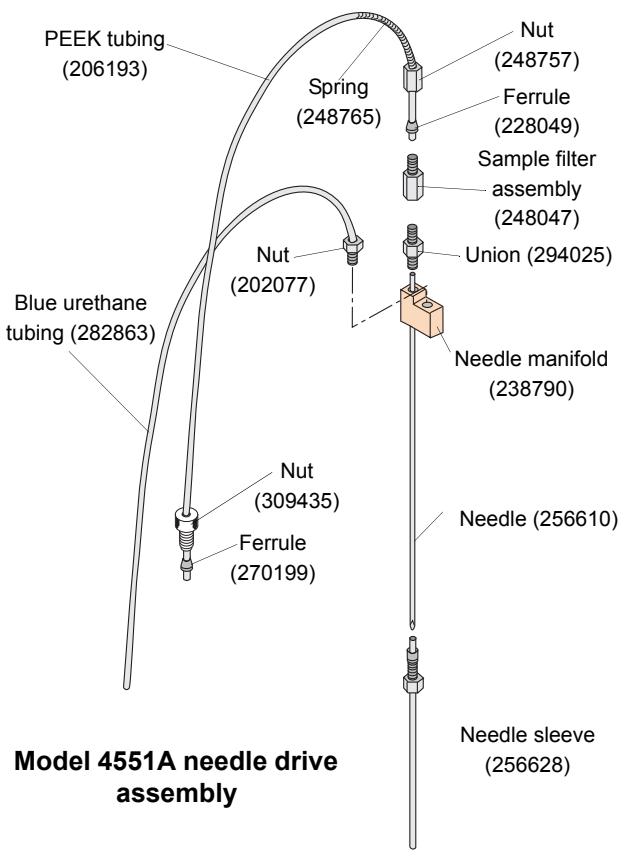

Model 4551A needle drive assembly

Tubing (see drawing)–Model 4551A

Product	Size	Unit	PN
PEEK tubing	1⁄16" x 0.040 I.D.	inch	206193
Sample pump tubing kit		each	277319
Stainless steel tubing	1⁄16" x 0.030 I.D.	each	295543
Teflon tubing	1⁄8" x 0.030 wall	foot	147901
Transfer line assembly, 4560/ 4551A		each	309443
Transfer line assembly, SAM/ 4551A		each	312090
Transfer line assembly, Eclipse/ 4551A		each	321655
Tygon tubing, clear	1⁄4" x 1⁄8" I.D.	inch	257469
Urethane tubing, blue	1⁄8" x 1⁄16" I.D.	foot	282863
Urethane tubing, brown	1⁄8" x 1⁄16" I.D.	inch	257550
Urethane tubing, clear	1⁄8" x 1⁄16" I.D.	foot	166224
Urethane tubing, green	1⁄8" x 1⁄16" I.D.	foot	282855
Urethane tubing, red	1⁄8" x 1⁄16" I.D.	foot	282848

Customer Communications

Have a question about our instruments or an application? Call us about onsite specific applications training and hands-on seminars. Call us at our toll-free technical support hotline (800) 336-1711.

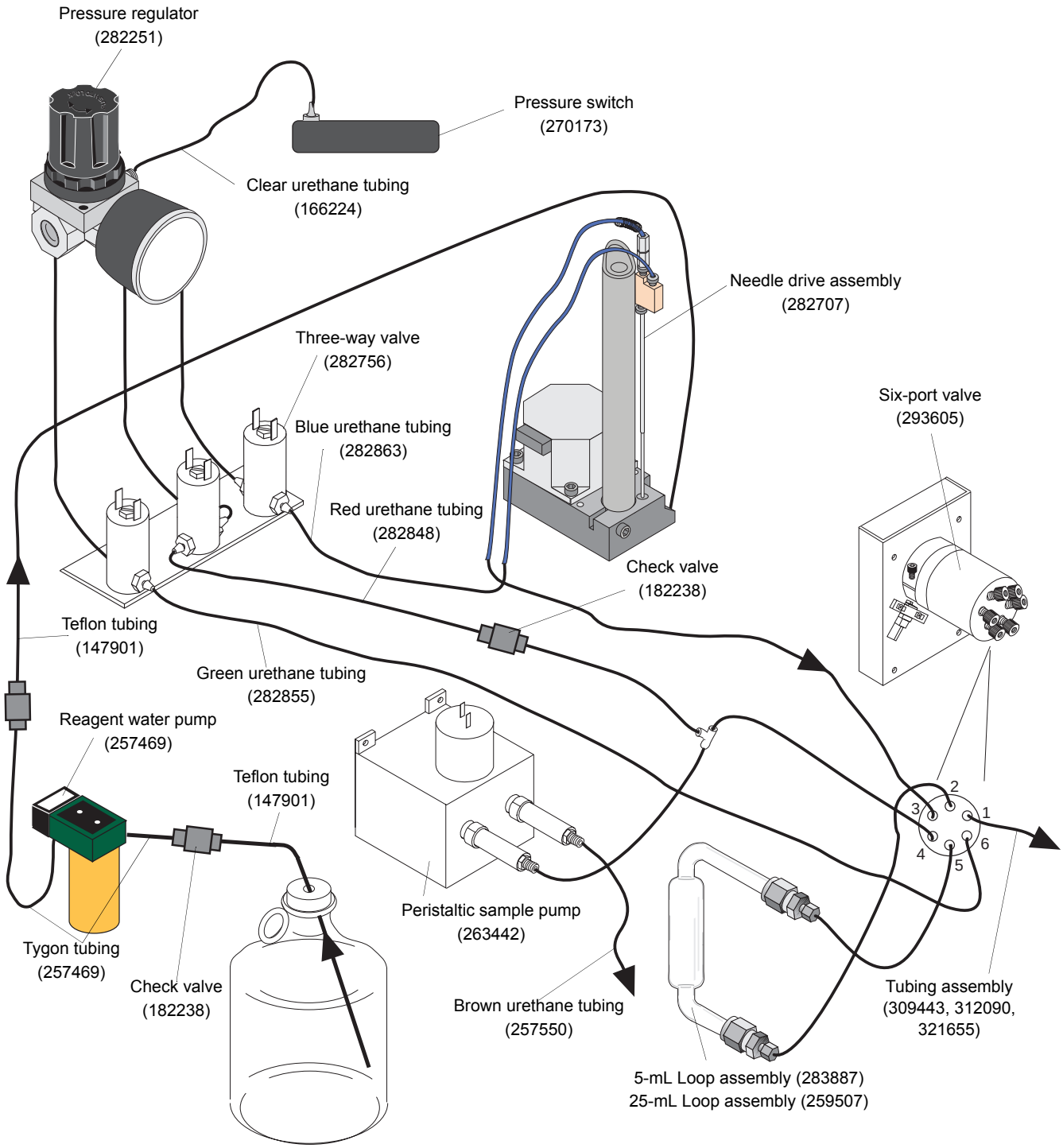

Model 4551A tubing schematic

Model 4551 Water Autosampler Replacement Parts and Supplies

Glassware–Model 4551

Product	Size	Unit	PN
Caps, open hole	for 40-mL vials	72/pk	296079
Glass loop upgrade	5 mL	each	317016
Reagent water bottle assembly		each	248915
Septa, silicone, Teflon faced	for 40 mL vials	72/pk	296061
Vial, wash/waste station		each	232801
VOA vial kit	40 mL vials w/ caps and septa	72/kit	296053

Experience worry-free instrument ownership with an OI Analytical service contract or extended warranty. Call and ask us for more information at (800) 336-1911.

Miscellaneous Parts–Model 4551

Product	Size	Unit	PN
Back-up battery	3.6 V	each	211953
Cable, BNC to BNC	5 ft.	each	235515
Carousel cover		each	257436
Check valve		each	257527
Ferrule, brass tube	1/16"	each	228049
Ferrule, Tefzel tube	1/8"	each	263756
Ferrule, Tefzel tube	1/16"	each	270199
Fitting nut, polypropylene	1/4-28, 1/8" tube	each	263764
Fuse, 2 amp, 250 V Slo-Blo		each	211441
Fuse, 3.15 amp	5 mm x 20 mm	each	257329
In-line regulator, 0-60 psi gauge	1/8" female fittings	each	260414
Loop cover		each	257451
Model 4551 firmware (latest revision)		each	257147
Model 4551 operator's manual		each	235895
Needle drive cover		each	253518
Nut, female, stainless steel	1/16"	each	256966
Nut, male, stainless steel	1/16"	each	223057
Nut, stainless steel spring	1/16"	each	248757
Power cord for North America, 110 V		each	116038
Sample filter assembly		each	248047
Sample loop	5 mL	each	235911
Sample loop w/ clip	25 mL	each	263772
Sample loop w/o clip	25 mL	each	259507
Sample tray assembly		each	234815
Septum piercing needle w/ ferrule attached		each	256610
Six-port valve assembly		each	263673
Transfer gas needle sleeve w/ nut and ferrule attached		each	256628
Union, male, stainless steel, DSF	1/16"	each	253559

Needle Drive Assembly Parts (see drawing)–Model 4551

Product	Size	Unit	PN
Ferrule, brass tube	1⁄16"	each	228049
Ferrule, PEEK tube ring	1⁄16"	each	257675
Nut, female, stainless steel	1⁄16"	each	256966
Nut, male, stainless steel	1⁄16"	each	223057
Nut, stainless steel spring	1⁄16"	each	248757
Sample filter assembly		each	248047
Sample transfer assembly, PEEK		each	256529
Septum piercing needle w/ferrule attached		each	256610
Transfer gas assembly, PEEK		each	257246
Transfer gas needle sleeve w/nut & ferrule attached		each	256628
Union, male, stainless steel, DSF	1⁄16"	each	294025

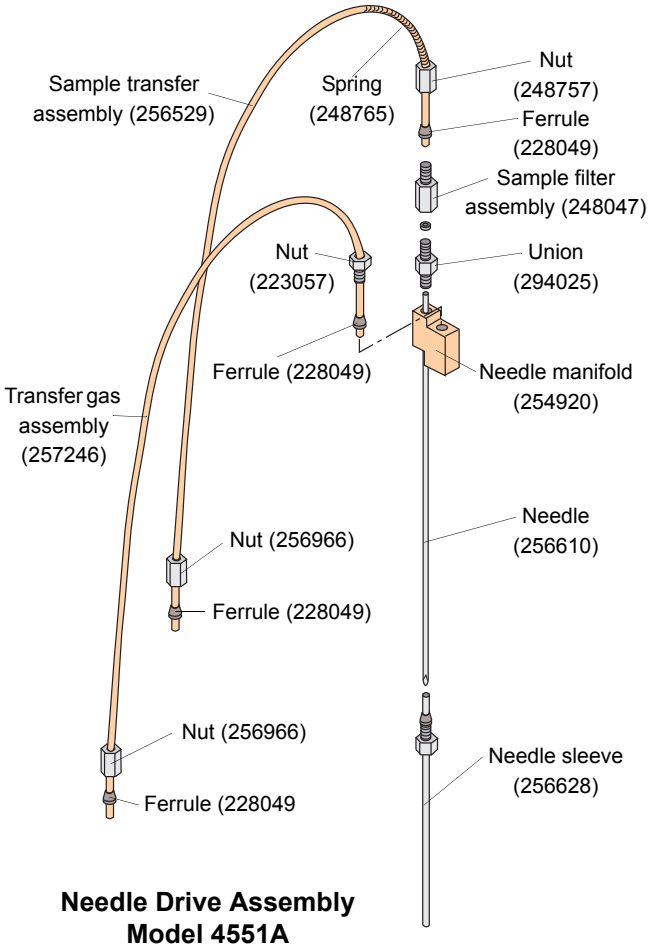

Needle Drive Assembly Model 4551A

Tube Assemblies (see drawing)–Model 4551

Product	Unit	PN
Manifold to needle sleeve assembly	each	257386
Sample transfer line, PEEK	each	256529
Transfer gas line, PEEK	each	257246
Transfer line to manifold assembly	each	257410
Transfer line to Model 4560/transfer line to SIM A assembly	each	235879
Valve to manifold assembly	each	257402
Valve to needle assembly	each	257394

Tubing–Model 4551

Product	Size	Unit	PN
Copper tubing, cleaned	1⁄8" x 0.070 mm I.D.	foot	111427
Norprene® tubing	1⁄8" x 3⁄8" I.D. x 9"	each	234914
Silicone tubing, clear	1⁄8" x 1⁄16" I.D.	foot	179812
Teflon tubing	1⁄16 x 0.020 mm I.D.	foot	165896
Teflon tubing	1⁄8" x 0.030 wall	foot	147901
Tygon tubing	3⁄16" x 1⁄16" I.D.	foot	174003
Tygon tubing, clear	1⁄4" x 1⁄8" I.D.	inch	257469
Urethane tubing, brown	1⁄8" x 1⁄16" I.D.	inch	257550
Viton® tubing, black	1⁄4" x 1⁄8" I.D.	inch	257477

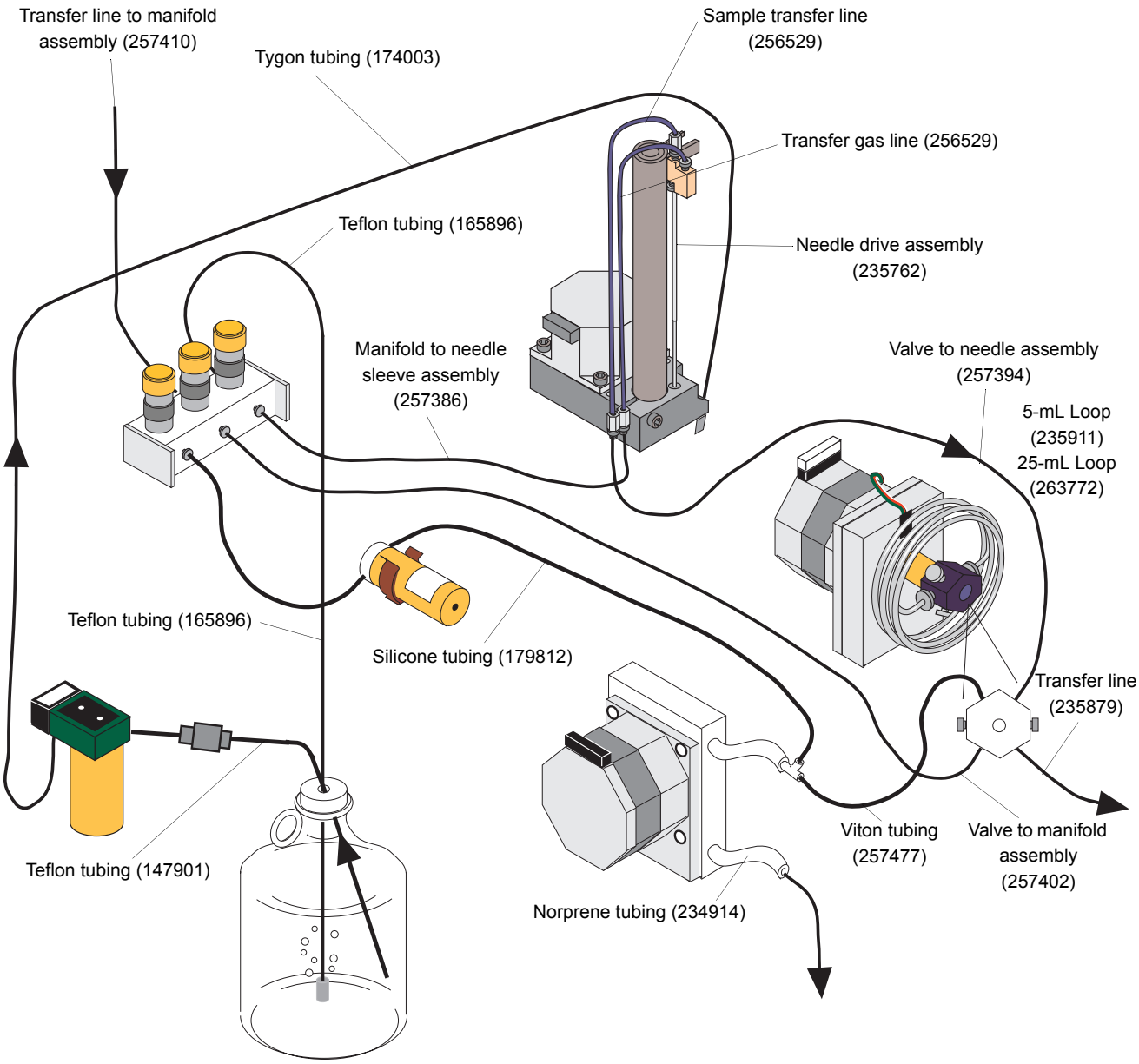

Model 4551 tubing schematic

Standards Addition Module (SAM) Replacement Parts and Supplies

Standards Addition Module (SAM) Parts

Product	Unit	PN
Waste line assembly	each	320830
Ferrule, 12 mm, Teflon	10/pk	223164
Fitting/ferrule for waste line, PEEK	each	309591
Interface cable, Model 4551 to SAM	each	282293
Interface cable, Model 4551A to SAM	each	294660
Regulator, 0–60 psi	each	282251
Standards reservoir	each	282335
Three-position valve w/actuator, 1-µL loop	each	295998
Three-position valve w/o actuator, 1-µL loop	each	282350
Tube assembly, Model 4506 to SAM	each	312074
Tube assembly, Model 4551 to SAM	each	286419
Tube assembly, Model 4551A to SAM	each	312090
Tube assembly, SAM to Model 4560	each	286427
Tube assembly, standards reservoir A	each	320831
Tube assembly, standards reservoir b	each	320832
Tube assembly, SAM to Eclipse	each	321955

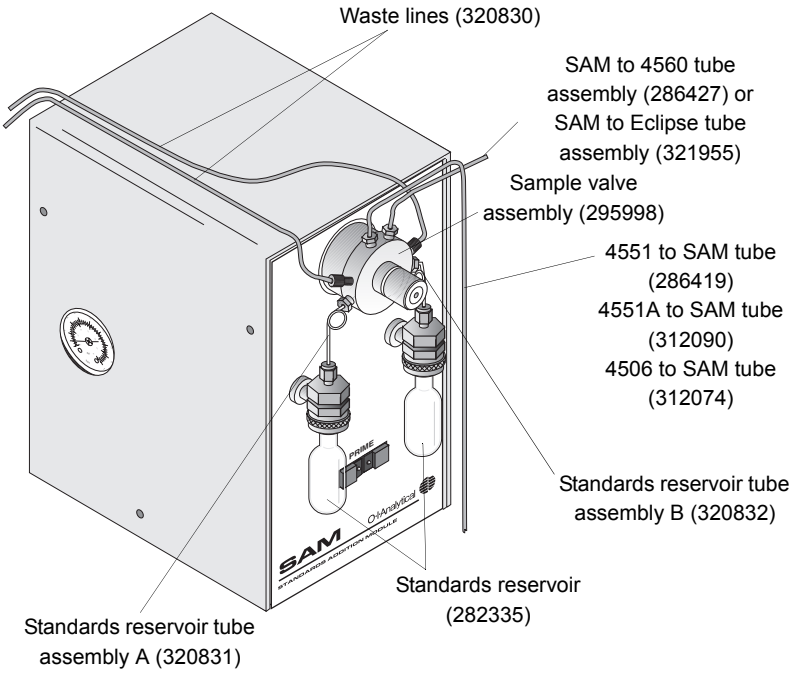

Standards Addition Module

Model 4552 Water/Soil Autosampler Replacement Parts and Supplies

Accessories and Options–Model 4552

Product	Unit	PN
Bar code reader	each	276709
Recirculating bath for sample vial cooling	each	261909
Interface kit, 4552 to 4560	each	276592
Interface kit, 4552 to Tekmar	each	293043
Needle sparge conversion kit to SoilVial™	each	276717
Recirculating bath tubing kit	each	302810
Rinse water kit, for interfacing direct water line to Model 4552	each	276725
SoilVial conversion kit to needle sparge	each	276733

Gas Controllers–Model 4552

Product	Unit	Part #
Helium flow controller	each	03-504156-00
Purge gas pressure gauge	each	27-239992-00
Purge gas regulator	each	03-918707-04

Still have questions? Call us and let us help!
(800) 653-1711

Interface Cables–Model 4552

Product	Unit	PN
Cable to OI Eclipse/4560 to Agilent	each	284935
Cable to Tekmar 2000/3000 with Agilent 5890 with 5970/71/72 MSD and Unix-B or MS-DOS, and 5890/5989 MS Engine	each	03-505874-00
Cable to Tekmar 2000/3000 with Agilent 6890	each	03-505873-00
Cable to Tekmar LSC-2000/3000 to Agilent 5890	each	03-505869-00
Cable to Tekmar LSC-2000/3000 to spade lugs	each	03-505872-00
Cable to Tekmar LSC-2000/3000 to Varian 3400/3700	each	03-505868-00
Cable to Tekmar LSC-2000/3000 with Agilent 5995/85/87/88/92	each	03-505876-00
Cable to OI 4460/4560 to Agilent 5890, RTE Agilent 1000 GC/MS software, Agilent 5970 MSD, or Agilent 5988 MS	each	03-505875-00
Handshake pigtail cable to Agilent 5890	each	185868
Handshake pigtail cable to Agilent 6890	each	252213
Handshake pigtail cable to Shimadzu 17A	each	244483
Handshake pigtail cable to Varian 3400	each	188409

Internal Standards Parts–Model 4552

Product	Size	Unit	PN
Ferrule for reservoir vial, Teflon	⅜"	each	03-694637-00
Rotor loop for standards valve	1 mL	each	03-505726-00
Six-port valve for internal standards, Valco®		each	03-505478-00
Six-port valve w/ motor for internal standards, Valco		each	03-505879-00
Standards reservoir mount		each	03-505604-00
Standards reservoir vial	5 mL	each	03-505484-00

Lines and Fittings–Model 4552

Product	Size	Unit	PN
Ferrule, stainless steel, Valco®	1⁄16"	5/pk	196246
Ferrule set, stainless steel, Swagelok®	1⁄16"	5/pk	178277
Ferrule for Eclipse water transfer line, Teflon	1⁄16"	5/pk	322248
Ferrule for Model 4560 water transfer line, Teflon	1⁄16"	5/pk	272443
Ferrule & nut, flangeless	1⁄16"	8/pk	03-700081-01
Fitting for Eclipse water transfer line, PEEK	1⁄16"	each	322231
Knurled fitting for Model 4560 water transfer line, stainless steel	1⁄16"	each	217240
Autosampler interface fitting adapter to Model 4560		each	278671
Waste line replacement kit		each	03-700019-90
Standards pick-up line		each	03-700020-00
Nut, female, stainless steel, Swagelok	1⁄16"	5/pk	169715
Soil purge gas transfer line, nickel tubing only		each	03-505745-00

Lines and Fittings–Model 4552

Product	Size	Unit	PN
Transfer line w/ heater assembly, Model 4560 or Tekmar 2000/3000		each	03-700001-01
Transfer line w/ heater assembly and bracket/clamp, Model 4560 or Tekmar 2000/3000		each	03-700025-90
Transfer line, stainless steel	0.062" x 0.40" x 60"	each	03-505514-00

Miscellaneous Parts–Model 4552

Product	Size	Unit	PN
Magnetic stir bar		each	03-502955-00
Reservoir bottle, safety coated	80 oz	each	03-503906-00
Wash bottle plug assembly		each	03-505816-00
Wash bottle top		each	03-503055-00
Water probe screen	10 µL	each	03-505598-00

Probe Assemblies–Model 4552

Product	Unit	PN
Needle sparge probe assembly (SN >996–13160)	each	03-505741-90
Needle sparge probe assembly (SN >13160)	each	03-700077-91
Probe guide support rod kit	each	03-700140-00
Soil probe assembly for double-ended vials (SN >996–13160)	each	03-505743-00
Soil probe assembly for double-ended vials (SN >13160)	each	03-700076-91
Lower soil purge gas needle assembly for double-ended vials	each	03-505463-00
Water probe assembly (S/N >995)	each	03-505739-00

Robotic Mechanism Parts–Model 4552

Product	Unit	PN
Elevator motor assembly	each	03-505878-00
Microswitch	each	03-500223-00
Motor assembly, front/back	each	03-505881-00
Motor assembly, left/right	each	03-505880-00
Motor assembly, up/down	each	03-505884-00
Motor assembly, stir	each	03-505883-00
Motor pulley, ¼" for elevator and syringe	each	03-505429-00
Motor pulley, front/back, left/ right, and up/down	each	03-505393-00
Probe block heater assembly (SN <13161)	each	03-505895-00
Sensor assembly, no vial	each	03-505269-00
SoilVial and upper soil heater assembly	each	03-505896-00
Syringe and elevator limit switch assembly	each	03-505273-00
Timing belt, front/back motor	each	03-505362-00
Timing belt, left/right motor	each	03-505372-00
Timing belt, up/down motor	each	03-505384-00
Timing belt, vial elevator and syringe motors	each	03-505477-00
Timing pulley, leadscrew	each	03-505363-00
Transfer line heater assembly	each	03-700001-01
Vial gripper block assembly	each	03-505844-00
Vial gripper piston and O-ring	each	03-505389-00
Water heater assembly	each	03-505596-00
Syringe motor assembly	each	03-505878-00
Upper soil valve heater assembly (SN >13160)	each	03-700072-01
Gripper ring	each	03-101662-00

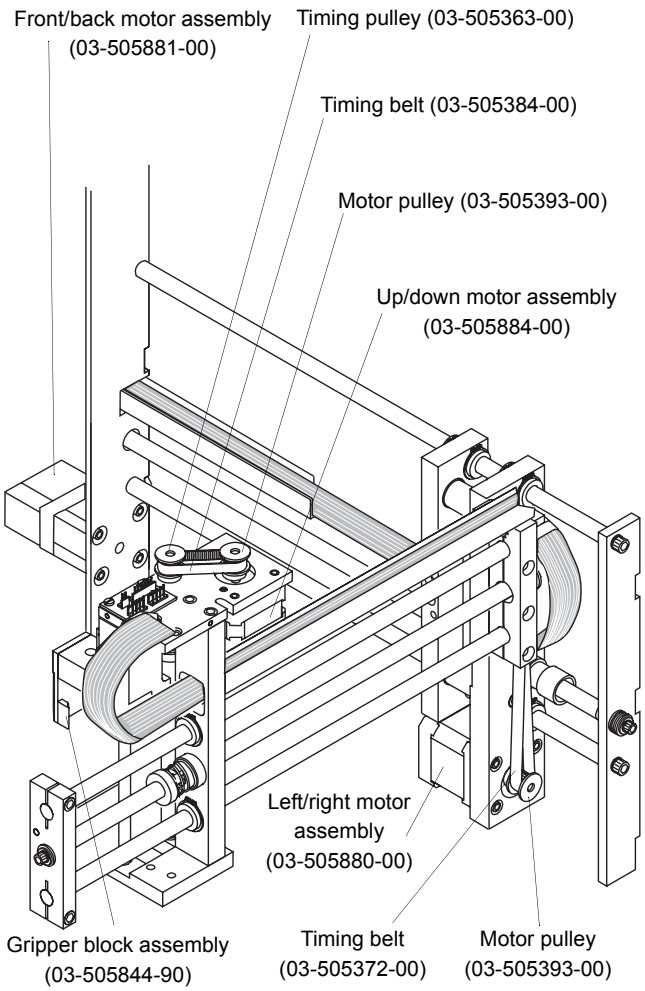

Model 4552 robotic mechanism schematic

Syringe Parts–Model 4552

Product	Size	Unit	PN
Glass syringe barrel		each	03-502968-00
Plunger assembly	26 mL	each	03-700060-91
Plunger drive bracket		each	03-505439-00
Plunger rod		each	03-502959-00
Syringe mixing manifold assembly		each	03-505830-00
Syringe mount		each	03-505450-00
Syringe O-ring		each	03-505495-00
Syringe packing		each	03-505441-00
Syringe thumbscrew		each	03-500007-00
Syringe, Luer-Lok	5 mL	each	290320
Water probe screen	10 µm	each	03-505598-00

For international pricing, contact your local OI Analytical representative. For contact information, visit us at www.oico.com.

Valves–Model 4552

Product	Unit	PN
Burkert solenoid valve assembly	each	03-505720-00
Helium manifold replacement assembly	each	03-700108-90
Purge gas cut-off valve assembly (SN >995 & <12047)	each	03-505791-00
Purge gas cut-off valve J19 assembly (SN >12047)	each	03-505899-03
Solenoid mixing manifold assembly	each	03-505831-00
Three-way gripper solenoid valve assembly, standard mount	each	03-505899-02
Three-way pressure gas solenoid valve assembly, manifold mount (SN >12953)	each	03-700112-00
Three-way upper soil valve, heated (SN >120039)	each	03-700032-00
Two-way soil purge gas solenoid valve assembly, standard mount	each	03-505899-01
Two-way soil transfer gas solenoid valve assembly, manifold mount (SN >12953)	each	03-700111-00

Vials and Septa–Model 4552

Product	Size	Unit	PN
Screw cap vials, w/ caps and septa	40 mL	72/pk	296053
Septa for water vial, Teflon/silica		72/pk	296061
Soil septa, low bleed		300/pk	03-504104-00
SoilVial	40 mL	6/pk	03-504099-00
Stir bars for SoilVial		6/pk	03-504024-00
Stir bars for water vials	40 mL	each	03-502955-00
Water vial cup		each	03-505451-00
Water vials, USEPA	40 mL	72/pk	03-630068-00

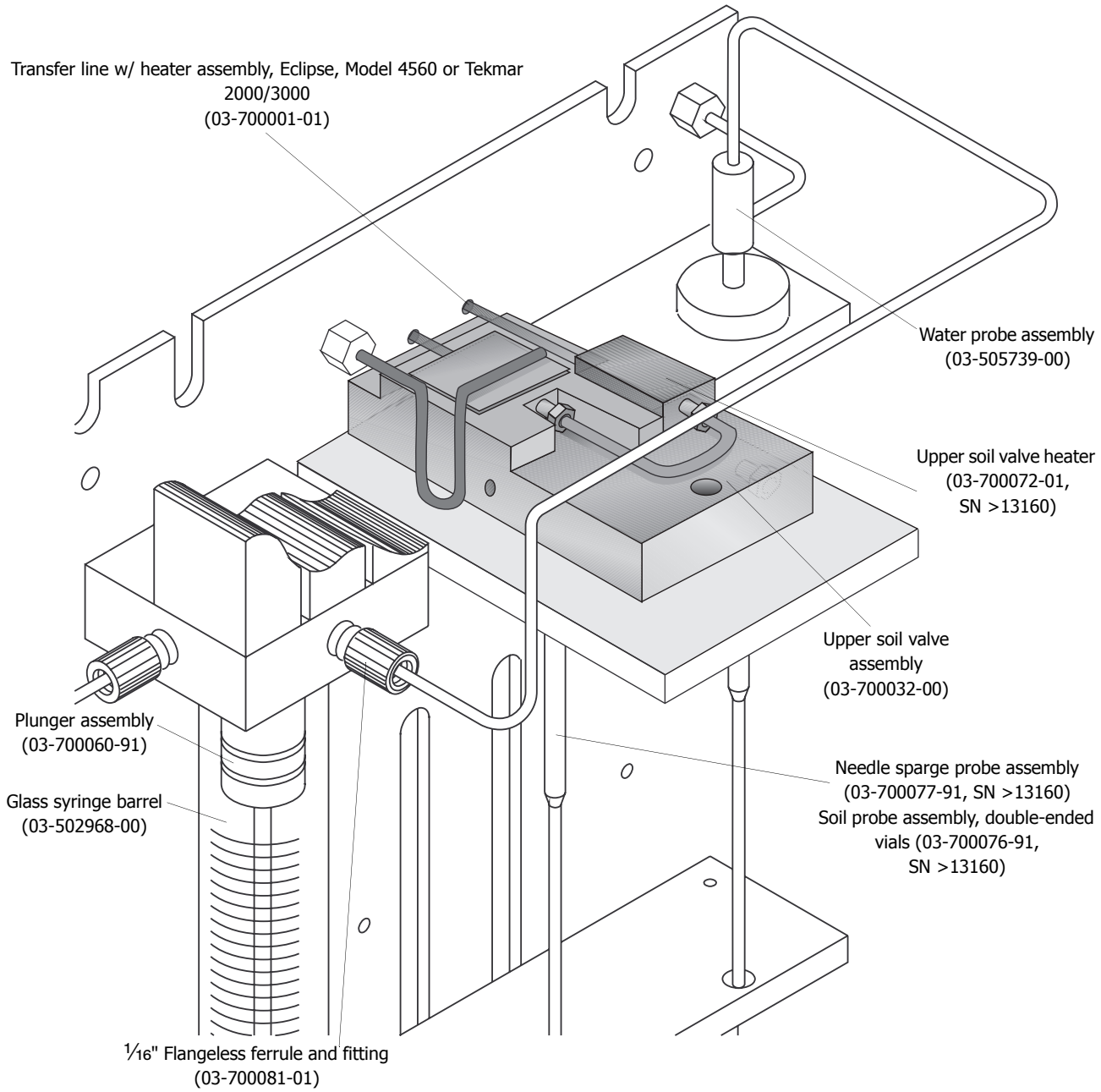

Model 4552 robotic internal schematic

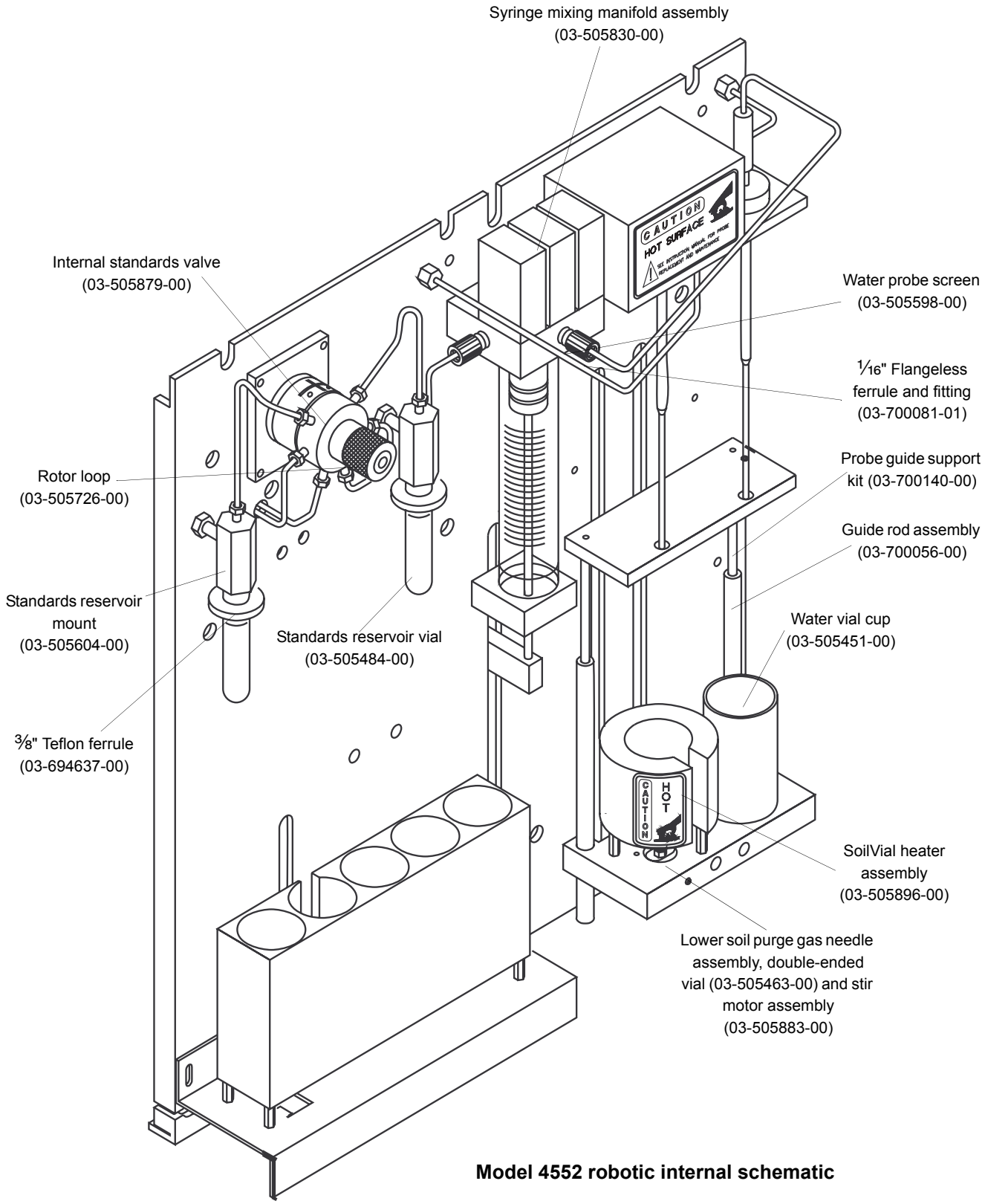

Model 4552 robotic internal schematic

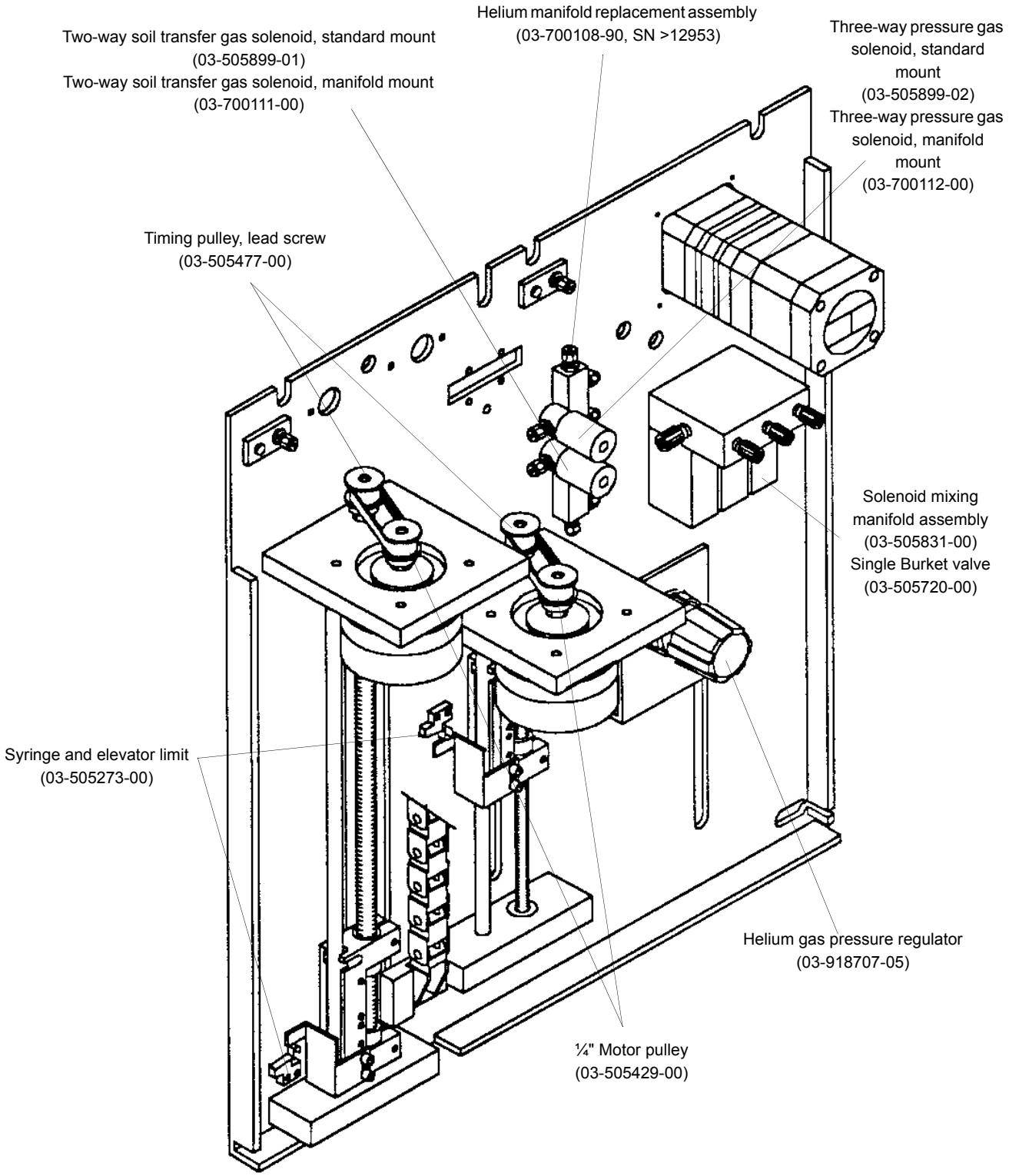

Model 4552 robotic internal schematic

DPM-16 Autosampler Replacement Parts and Supplies

Ferrules–DPM-16

Product	Size	Unit	PN
Brass reverse ferrule	1⁄16" tube	each	228049
Graphite/Vespel ferrule	1⁄16" tube	10/pk	216366
KEL-F ferrule	¼-28, 1⁄16" x 0.8 mm	5/pk	196204
Stainless steel, gold-plated ferrule	1⁄16" tube	5/pk	217828
Stainless steel ferrule	1⁄16" tube	5/pk	196246
Teflon ferrule	1⁄16" tube	5/pk	196220
Teflon ferrule	6 mm tube	each	224337
Teflon ferrule	18 mm tube	10/pk	224352

Gas Line Connections (see drawing)–DPM-16

Product	Size	Unit	PN
Model 4560 transfer line adapter fitting		each	209536
Nut, male, stainless steel	1⁄16" x 1"	each	225557
Nut, male, stainless steel	1⁄16"	5/pk	196311
Purge gas tube assembly, Model 4560 to DPM		each	188623

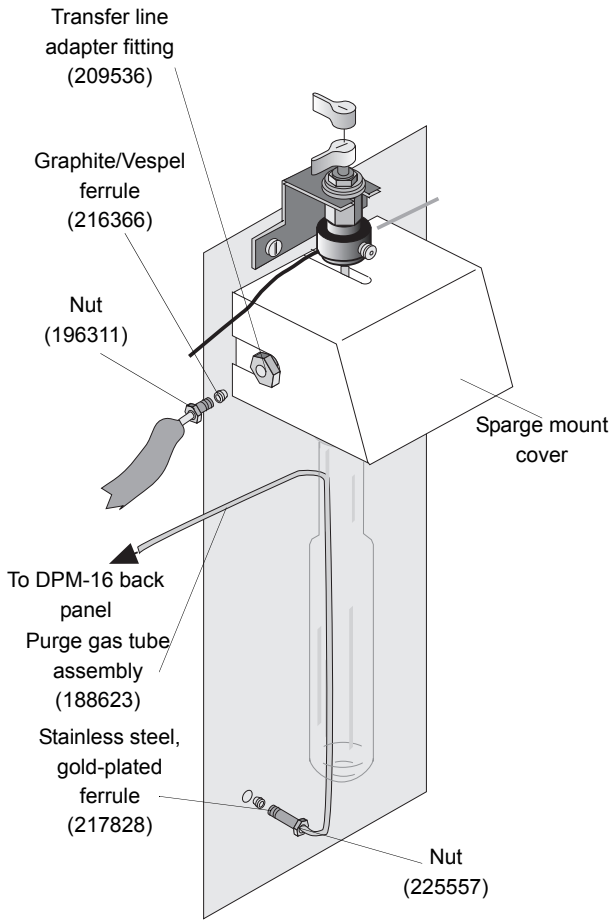

Gas lines connecting the Model 4560 to the DPM-16

Heater Jacket Kits–DPM-16

Product	Size	Unit	PN
Frit sparger, 110/220 V	5 or 25 mL	each	218669
Frit sparger, 110/220 V	5 or 25 mL	16/kit	218651
Needle sparger, 110/220 V	5 mL	each	198739
Needle sparger, 110/220 V	5 mL	16/kit	198689
Needle sparger, 110/220 V	25 mL	each	199406
Needle sparger, 110/220 V	10 or 25 mL	16/kit	198697

Miscellaneous Parts–DPM-16

Product	Size	Unit	PN
DPM-16 transfer line		each	247783
DPM-16/MHC-16 operator's manual		each	248393
Fuse, 5 amp, Slo-Blo	5 x 20 mm	each	313205
Fuse, 500 mA, Slo-Blo	5 x 20 mm	each	249987
Heated transfer line	48"	each	247783
Mud-Dawgs		50/pk	215061
Sample valve mounting bracket		each	252049

Needles–DPM-16

Product	Size	Unit	PN
Sample needle for frit sparger	19.6 cm	each	203042
Sample needle w/ side hole, for needle sparger	19.5 cm	each	232348

Purge Tube Connections (see drawing)–DPM-16

Product	Size	Unit	PN
Coupling fitting, brass/ nickel	10-32		176033
DPM-16 frit sparging purge tube assembly		each	247924
DPM-16 needle sparging purge tube assembly		each	258483
Ferrule, KEL-F	¼-28, 1⁄16" x 0.8 mm	5/pk	196204
Ferrule, Teflon	6 mm tube	each	224337
Knurled nut, male, stainless steel	1⁄16"	each	217240
Nut, aluminum	¼-28, 1⁄16"	5/pk	196287
Reverse ferrule, brass	1⁄16" tube	each	228049
Union, female, stainless steel	1⁄16" -1⁄16"	each	218081
Union, male, brass	¼" -1⁄16"	each	197251

DPM-16 purge tube connections for needle sparging

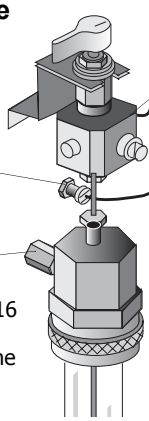

*Connections to the DPM-16 front panel (228049 and 217240) are attached to the purge gas line (258483).

DPM-16 purge tube connections for frit sparging

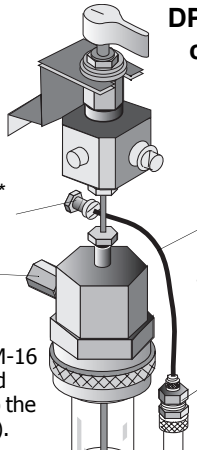

*Connections to the DPM-16 front panel (228049 and 217240) are attached to the purge gas line (247924).

Sample Valve and Sparge Mount Assemblies (see drawing)–DPM-16

Product	Size	Unit	PN
Ferrule, Teflon	1⁄16" tube	5/pk	196220
Ferrule, Teflon	18 mm tube	10/pk	224352
Knurled nut, female, stainless steel	18 mm	each	224675
Knurled nut, male, stainless steel	1⁄16"	each	217240
Luer-Lok fitting, female, KEL-F	¼-28	each	169468
Nut, aluminum	¼-28, 1⁄16"	5/pk	196287
Nut, male, stainless steel	1⁄16"	5/pk	196311
Sample needle w/ side hole, for needle sparger	19.5 cm	each	232348
Sample valve mounting bracket		each	252049
Three-port sample valve, KEL-F	¼-28	each	169484
Union w/o nut, stainless steel, gold-plated	18 mm	each	271809
Union, male, brass	¼"-1⁄16"	each	197251

Sparger Kits*–DPM-16

Product	Size	Unit	PN
Frit spargers	5 mL, 18 mm neck O.D.	16/kit	247916
Frit spargers	25 mL, 18 mm neck O.D.	16/kit	247932
Needle spargers	5 mL, 18 mm neck O.D.	16/kit	232207
Needle spargers	25 mL, 18 mm neck O.D.	16/kit	232223
Needle spargers, disposable	10 mL, 18 mm neck O.D.	125/ case	199521

*For individual spargers, see “Glassware Selection Guide” on page 95.

Syringes–DPM-16

Product	Size	Unit	PN
Sample syringe w/ Luer-Lok	5 mL	each	177659
Sample syringe w/ Luer-Lok	25 mL	each	172461
Syringe	10 µL x 2" needle	each	167545

Tube Assemblies–DPM-16

Product	Unit	PN
DPM-16 frit sparging purge tube assembly	each	247924
DPM-16 needle sparging purge tube assembly	each	258483

Valves–DPM-16

Product	Unit	PN
Three-port sample valve, KEL-F, ¼-28	each	169484
Three-port valve w/ electric actuator, stainless steel, 110 V	each	187179

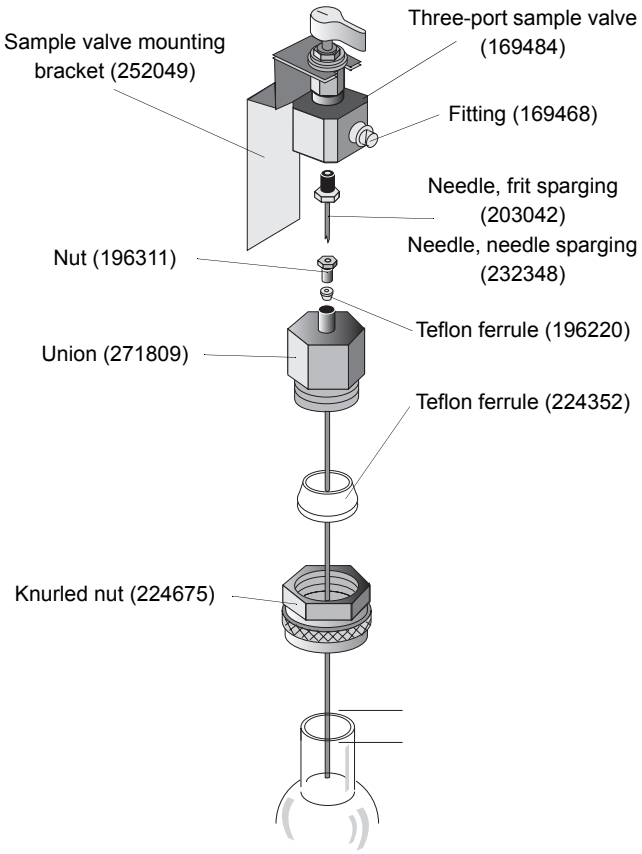

DPM-16 sample valve and sparge mount assembly

Air Analysis Products Replacement Parts and Supplies

Air Sampling Tubes and Containers

Product	Size	Unit	PN
Air-Tube shipping container	6 mm O.D., 4.5" L	each	260307
Blank trap, glass	6 mm O.D. 4.5" L	each	260208
Blank trap, stainless steel	¼" O.D., 4.5" L	each	260174
Carbon molecular sieve trap, glass	6 mm O.D., 4.5" L	each	260224
Carbon molecular sieve trap, stainless steel	¼" O.D., 4.5" L	each	260190
Tenax trap, glass	6 mm O.D., 4.5" L	each	260216
Tenax trap, stainless steel	¼" O.D., 4.5" L	each	260182

Air-Tube Desorber Accessories (see drawings)

Product	Size	Unit	PN
Adapter, stainless steel, gold-plated	18 mm-¼"	each	248187
Air Tube, stainless steel, glass-lined	¼" O.D. x 4.75"	each	197319
DPM purge to Air-Tube assembly		each	248971
Ferrule, Teflon	1⁄16" tube	10/pk	198432
Ferrule, Teflon	¼" tube	5/pk	196261
Ferrule, Teflon	18 mm tube	10/pk	224352
Knurled nut, female, stainless steel	¼"	each	169674
Knurled nut, female, stainless steel	18 mm	each	224675
Tube assembly, Model 4560 to Air-Tube		each	248963
Tube assembly, Eclipse to Air-Tube		each	321669
Plug w/ ferrule, male, stainless steel	1⁄16" tube	each	217778
Tubing w/o fittings, PEEK	1⁄16" x 0.020 mm I.D.	each	197194
Union w/ ferrules, male, brass	¼" x 1⁄16"	each	197251

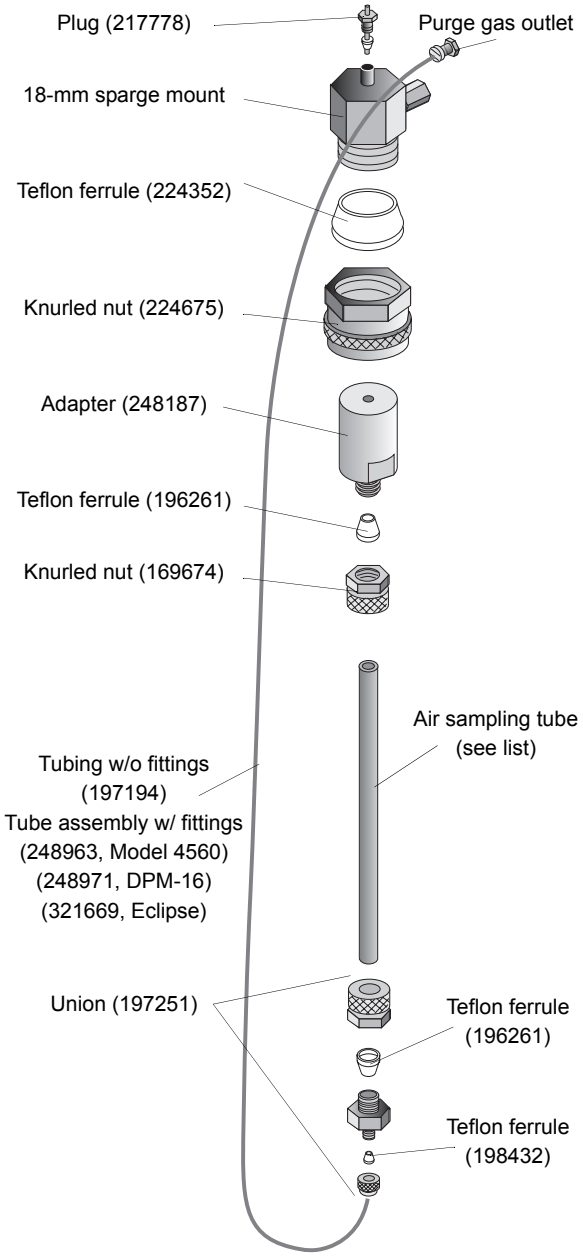

18-mm Air-Tube Desorber assembly

Cryo-Focusing Module (CFM) Replacement Parts and Supplies

Boards–CFM

Product	Unit	PN
Backplane board	each	203661
Front panel LED board	each	203596
Front panel thumbwheel board	each	203604
Microprocessor board	each	203810
Power supply board	each	203802

Cables–CFM

Product	Unit	PN
CFM injector to ground cable	each	229401
CFM to injector cable, Agilent 5890	each	204024
CFM/4560/4552 cable	each	297309
CFM/4560/4552/Agilent GC cable	each	297259
GC ready invert cable	each	297234
Handshake pigtail cable, Agilent 5890/6890	each	185868
Model 4560 to CFM cable	each	226548
Thermocouple probe cable	each	216838

Ferrules–CFM

Product	Size	Unit	PN
Graphite/Vespel ferrule	1⁄16" x 0.8 mm tube	10/pk	196105
Graphite/Vespel ferrule	1⁄16" x 0.5 mm tube	10/pk	196113
Graphite/Vespel ferrule	1⁄16" tube	10/pk	216366
Graphite/Vespel ferrule adapter	1⁄16" x 0.5 mm	5/pk	217679
Graphite/Vespel ferrule adapter	1⁄16" x 0.4 mm	5/pk	217687
Graphite/Vespel ferrule adapter	1⁄16" x 0.8 mm	5/pk	216416
Graphite/Vespel ferrule adapter	1⁄16" x 0.2 mm	5/pk	217695

Fittings–CFM

Product	Size	Unit	PN
Extended nut, female	1⁄16"	each	218024
Injector end union, stainless steel		each	202671
Union, female, brass	¼-⅛	each	208785

Miscellaneous Parts–CFM

Product	Size	Unit	PN
Ceramic column cutter		3/pk	206888
CFM control module		each	203836
CFM operator's manual		each	202879
CFM valve assembly		each	203554
Exhaust tube assembly		each	218123
Fuse, 2 amp		each	115493
Heater assembly for CFM injector, 115 V		each	205708
Injector assembly for Agilent 5890, 115 V		each	202580
Locking ring, aluminum	1.25 x 0.75	each	206409
Power cord, 110 V		each	116038
Septa, silicone	3.3 mm x 0.125	10/pk	217984
Syringe	10 µL x 2"	each	167545
Type K thermocouple w/ plug	10"	each	202846
Type K thermocouple, 0.20", stainless steel		each	208314

Tubing–CFM

Product	Size	Unit	PN
Alumina tubing	1⁄16" x 0.031 x 6.5	each	206557
Cryogen supply line		each	208256
Fused silica DB-1 precolumn tubing	0.53 mm I.D.	5/pk	226134
Uncoated fused silica precolumn tubing	0.53 mm I.D.	5/pk	202754

O·I·Analytical FINANCING

We offer several finance programs for your convenience. Renting and leasing programs as well as our rent-to-own program allow you to get the equipment you need. Call and ask for details at (800) 653-1711.

Low-Dead-Volume Injector (LDVI) Replacement Parts and Supplies

Low-Dead-Volume Injector Parts

6890	5890	Product	Size	Unit	PN
■		Allen wrench	3⁄32	each	233346
■	●	Extended nut, female, stainless steel	1⁄16"	each	218024
■	●	Ferrule, graphite/ Vespel	1⁄32" x 0.4 mm	each	236505
■	●	Ferrule, graphite/ Vespel	1⁄16" tube	10/ pk	216366
■	●	Ferrule, graphite/ Vespel	1⁄32" x 0.5 mm	6/pk	255794
■	●	Ferrule, graphite/ Vespel	1⁄32" x 0.8 mm	6/pk	255786
	●	Heater		each	226340
■		Heater and sensor cable assembly		each	252429
■		Heater block		each	229526
■	●	Injector body, stainless steel, gold-plated		each	242586
■		Injector mounting bracket		each	280560
■		Injector mounting bracket screws		each	132050
■		Injector mounting plate		each	280552
	●	Installation and maintenance guide		each	236414
■		Installation and maintenance guide		each	280586
■	●	Knurled nut, male, stainless steel	1⁄32"	each	226365
■		Liner tube		each	233353

Low-Dead-Volume Injector Parts

6890	5890	Product	Size	Unit	PN
■		Locking hex nut		each	214817
■		Mounting screws, TORX M4X10		each	252585
	●	PRT		each	170093
■	●	Secondary needle guide	26 gauge	each	229666
■	●	Septum	1⁄4" x 0.125"	5/pk	236646
■	●	Septum nut assembly	26 gauge	each	240929
■	●	Union, female, stainless steel	1⁄32" x 1⁄16"	each	229583

Column Ferrules–LDVI

Product	Column Size	Unit	PN
Ferrule, graphite/ Vespel, 1⁄32" x 0.4 mm	0.25 mm	each	236505
Ferrule, graphite/ Vespel, 1⁄32" x 0.5 mm	0.32 mm	6/pk	255794
Ferrule, graphite/ Vespel, 1⁄32" x 0.8 mm	0.53 mm	6/pk	255786

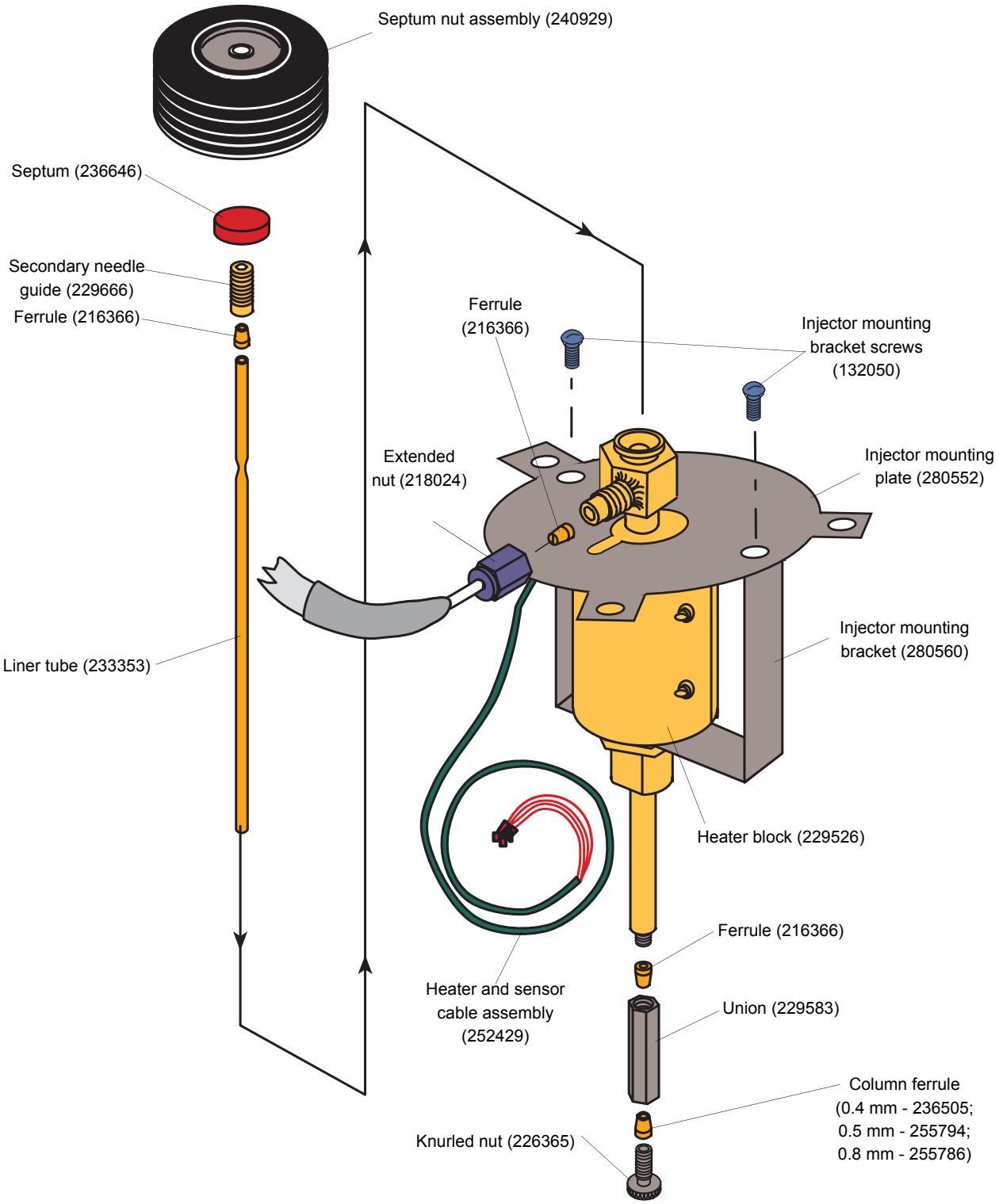

Low-Dead-Volume Injector for Agilent 6890 GC

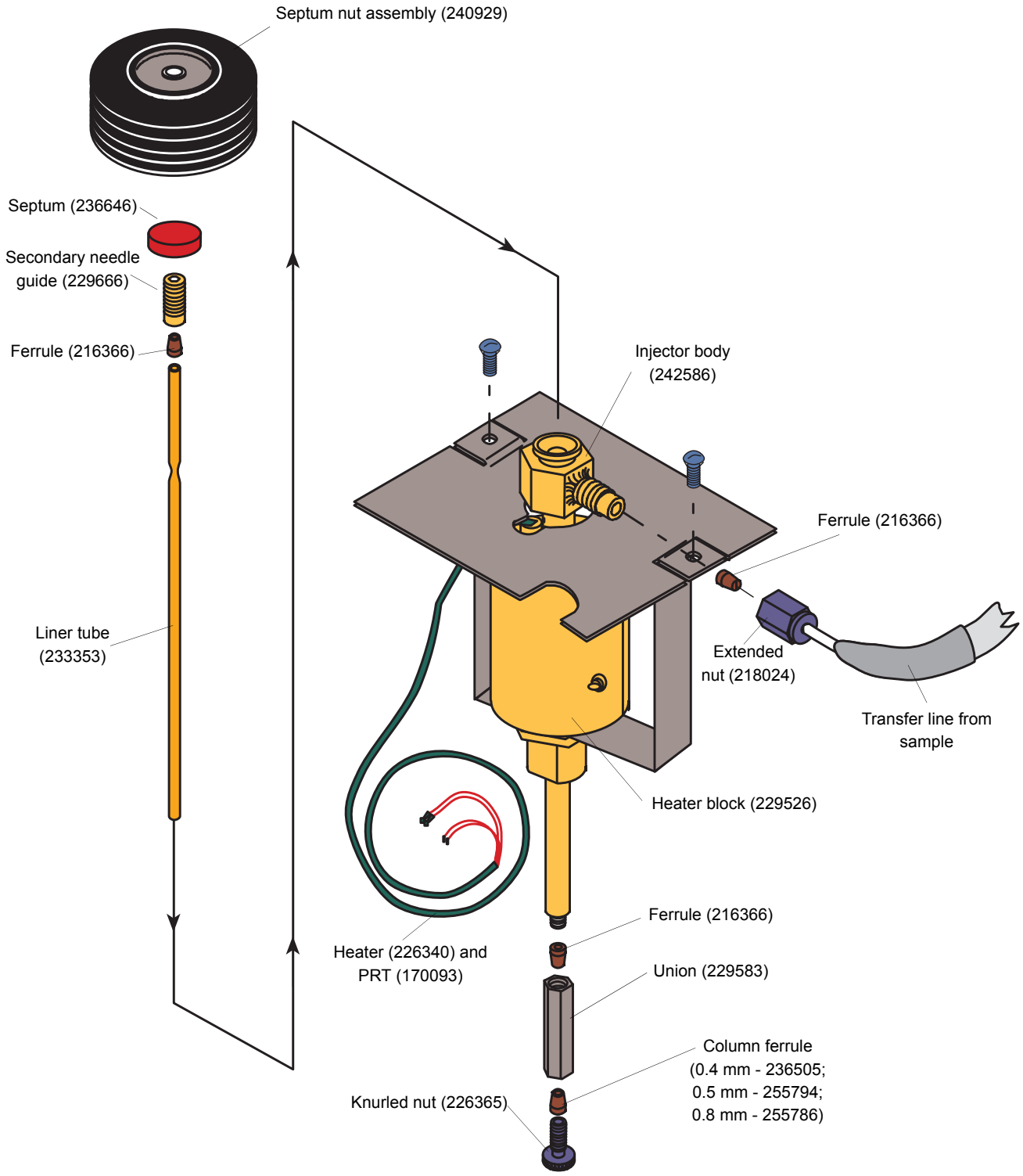

Low-Dead-Volume Injector for Agilent 5890 GC

Cable Selection Guide

Connecting the Eclipse Sample Concentrator to a GC requires a handshake cable that matches the GC type and model. Also, order a LAN cable if connecting to a LAN hub (PN 321902).

GC	Cable PN
Agilent 6890N H-cable required for the 6890N or if starting any other external device or non-Agilent data handling device using the same GC	252213 (300954)
Agilent 6890A/6890MS	252213
Agilent 6850	252213
Agilent 6850 GC/MS	252213 and 300954
Agilent 5890/4890	185868
Agilent 5970/5972MS (Pascal)	209866
Agilent 5970 (RTE-A)	209882
Varian 3800/3900	300368
Varian 3400	188409
Shimadzu 17A	244483
Thermo Finnigan Trace Also order Thermo Finnigan part number 119245-0001 to interface to a split/splitless injector	319822
Other Use a generic spade lugs handshake cable	285924

Interfacing a purge-and-trap sample concentrator to an autosampler requires a cable and an interface kit.

Autosampler	Sample Concentrator	GC	Cable PN	Interface Kit PN
Model 4552	Model 4560	Agilent	284935[1] and 252213	276592
	Eclipse	Agilent	284935[1] and 252213	321728
	Eclipse	Varian 3400/3600	284935[1] and 188409	321728
	Model 4560	Varian 3400/3600	284935[1] and 188409	276592
	Eclipse	Agilent 5890/5970 MSD	03-505875-00	321728
	Model 4560	Agilent 5890/5970 MSD	03-505875-00	276592
	Tekmar 2/3000/3100/Velocity	Agilent 6890	03-505873-00	293043
	Tekmar 2/3000/3100/Velocity	Varian 3800	03-925673-01	293043
	Tekmar 2/3000/3100/Velocity	Varian 3400/3600	03-505868-00	293043
	Tekmar 2/3000/3100/Velocity	Agilent 5890	03-505869-00	293043
	Tekmar 2/3000/3100/Velocity	Agilent 5890/5970 MSD	03-505874-00	293043
	Tekmar 2/3000/3100/Velocity	MS-5895/85/87/88/92	03-505876-00	293043
	Tekmar 2/3000/3100/Velocity	Other (spade lugs)	03-505872-00	—
Model 4551A	Eclipse/Model 4560	Any[2]	Included	Included

[1] Included in interface kit (PN 276592 and 321728).
[2] Order the appropriate handshake cable.

Glassware Selection Guide

Sparger	Size	Neck	Eclipse	Model 4560	Model 4551A	DPM	SAM	Model 4552	Single Piece PN	Kit PN	Units per kit
Frit	5 mL	18 mm	✓						321478	—	—
Frit	5 mL	18 mm		✓		✓			209015	247916	16
Frit	25 mL	18 mm	✓						321479	—	—
Frit	25 mL	18 mm		✓		✓			209031	247932	16
Frosted frit [3]	5 mL	18 mm	✓						321080	—	—
Frosted frit [3]	25 mL	18 mm	✓						321081	—	—
Needle	5 mL	18 mm		✓		✓			225623	232207	16
Needle	25 mL	18 mm		✓		✓			225631	232223	16
Frosted needle	5 mL	18 mm	✓						321696	—	—
Frosted needle	25 mL	18 mm	✓						321697	—	—
Disposable needle	10 mL	18 mm		✓		✓			—	199521	125
Reservoir	10 mL	12 mm					✓		282335	—	—
Reservoir	5 mL	⅜"						✓	03-505484-00	—	—
Vial Kit [4]	40 mL	28 mm			✓			✓	—	296053	72
Vial Kit [4, 5]	40 mL	28 mm						✓	—	03-630068-00	72
SoilVials (double-ended)	—	—						✓	—	03-504099-00	6
Wash/waste station vial	—	—			✓				232801	—	—

[3] Required for the Foam Buster option.

[4] Includes caps and septa.
[5] Recommended for heated soil or solids applications.

Purge Needle Selection Guide

Sparger	Purge Needles Size	Neck	Eclipse	Model 4560	DPM-16
Frit	5 mL, 25 mL	18 mm	**321035**	**209114**	203042
Frit for Foam Buster	5 mL, 25 mL	18 mm	321475	—	—
Needle	5 mL, 25 mL	18 mm	321699[6]	227371[6]	**232348**[6]
Needle for Foam Buster	25 mL	18 mm	321700[6]	—	—
Disposable	10 mL	18 mm	—	227371[6]	232348[6]

[6] Side hole

Standard instrument configuration in bold print.

Needle PN	Needle Length with Fittings
203042	19.6 cm
209114	22.9 cm
227371	22.9 cm
232348	19.5 cm
321035	25.4 cm (10")
321475	25.4 cm (10")
321699	25.1 cm (9.875")
321700	25.1 cm (9.875")

GC Detectors Replacement Parts and Supplies

How to order

OI Analytical makes ordering easier than ever. Order by mail, telephone, fax, or e-mail.*

Mail: OI Analytical
Order Entry Department
P.O. Box 9010
College Station, TX 77842-9010

Phone: (800) 673-3750
(979) 690-1711

Fax: (979) 690-0440

E-mail: orders@oico.com

When ordering, please provide the following:

- Contact name, company name, account number, shipping and billing addresses, and telephone number(s).
- Your company's purchase order number or credit card number (Visa, MasterCard, AMEX).
- OI Analytical part number, description, and quantity of item(s) ordered.
- Tax exemption number (if applicable).

* International customers should contact the OI Analytical distributor in their area. For a list of distributors, visit our website at ***www.oico.com***. If a distributor is not available, contact OI Analytical International Sales directly at (979) 690-1711 for distributor information.

Photoionization Detector (PID) Replacement Parts and Supplies 98

Electrolytic Conductivity Detector (ELCD) Replacement Parts and Supplies 100

Halogen Specific Detector (XSD) Replacement Parts and Supplies 106

Tandem PID/ELCD and Tandem PID/XSD Replacement Parts and Supplies 109

Pulsed Flame Photometric Detector (PFPD) Replacement Parts and Supplies 110

Flame-Ionization Detector (FID) Replacement Parts and Supplies 113

Photoionization Detector (PID) Replacement Parts and Supplies

Cables–PID

Product	Size	Unit	PN
Analog signal cable, 0–1 V for Agilent 5890		each	185850
Analog signal cable, 0–10 V for Agilent 6890		each	252551
Connector assembly for Agilent 5890 electrometer		each	193797
Connector assembly for Agilent 6890 electrometer		each	252379
Electrometer cable for Agilent 5890	3.7"	each	206094
Electrometer cable for Agilent 5890/6890	14.0"	each	206102
Electrometer cable for Agilent 6890	5.0"	each	252544
Electrometer cable for Agilent 5890/6890	6.5"	each	206110
External events cable for Agilent 6890		each	252569
Lamp high voltage cable		each	181750
Power cord, 110 VAC		each	116038
Remote start lamp cable, Model 4430		each	185843
Vent valve cable, Model 4430		each	187476
Vent valve cable, Model 4430, from PN 187476 to Agilent 5890		each	185967

Ferrules and Fittings–PID

Product	Size	Unit	PN
Brass ferrule	1⁄16" tube	6/pk	223776
Brass tube ferrule back	1⁄16" tube	5/pk	196162
Brass tube ferrule front	1⁄16" tube	5/pk	196170
Brass tube ferrule set	1⁄8"	10/pk	196089
Graphite ferrule	1⁄16"	10/pk	204693
Graphite ferrule	1⁄16" x 0.8 mm	10/pk	196097
Graphite tube ferrule	1⁄8" x 1⁄16"	5/pk	196196
Graphite/Vespel ferrule	1⁄4"	10/pk	222794
Graphite/Vespel ferrule	1⁄16" x 0.8 mm	10/pk	196105

Ferrules and Fittings–PID

Product	Size	Unit	PN
Graphite/Vespel ferrule	1⁄16" x 0.5 mm	10/pk	196113
Graphite/Vespel ferrule	1⁄16" x 0.4 mm	10/pk	208330
Nut for outlet restrictor, stainless steel		each	188490
Nut, female, stainless steel	1⁄4"	each	169682
Nut, male, brass, nickel-plated	1⁄16"	5/pk	196303
Nut, male, stainless steel	1⁄16"	each	223057
Nut, male, stainless steel	1⁄16"	5/pk	196311
Stainless steel ferrule	1⁄16"	5/pk	196246

Lamp Supplies–PID

Product	Unit	PN
Lamp, 9.6 eV	each	189423
Lamp, 10.0 eV	each	181180
Lamp, 11.8 eV	each	189431
Lamp polishing kit	each	214924
Lamp sealing O-ring	5/pk	255679
Lamp sealing spring	each	180901
Lamp sealing washer	each	188417
Lamp support ring	each	180919
Tower assembly	each	181867

Tubing–PID

Product	Size	Unit	PN
Copper tubing	1⁄8" x 0.070" I.D.	foot	111427
Outlet restrictor tube, stainless steel		each	188482
Stainless steel tubing	1⁄16" x 0.020" I.D.	foot	111732

Vent Supplies–PID

Product	Unit	PN
Two-way vent valve, brass/nickel, 24 VAC	each	183939
Vent outlet tube assembly for Agilent 5890	each	181826

Vent Supplies–PID

Product	Unit	PN
Vent outlet tube assembly for Agilent 6890)	each	252510
Vent valve assembly, 24 V, for Agilent, Varian, Shimadzu	each	182154
Vent valve needle valve	each	195461

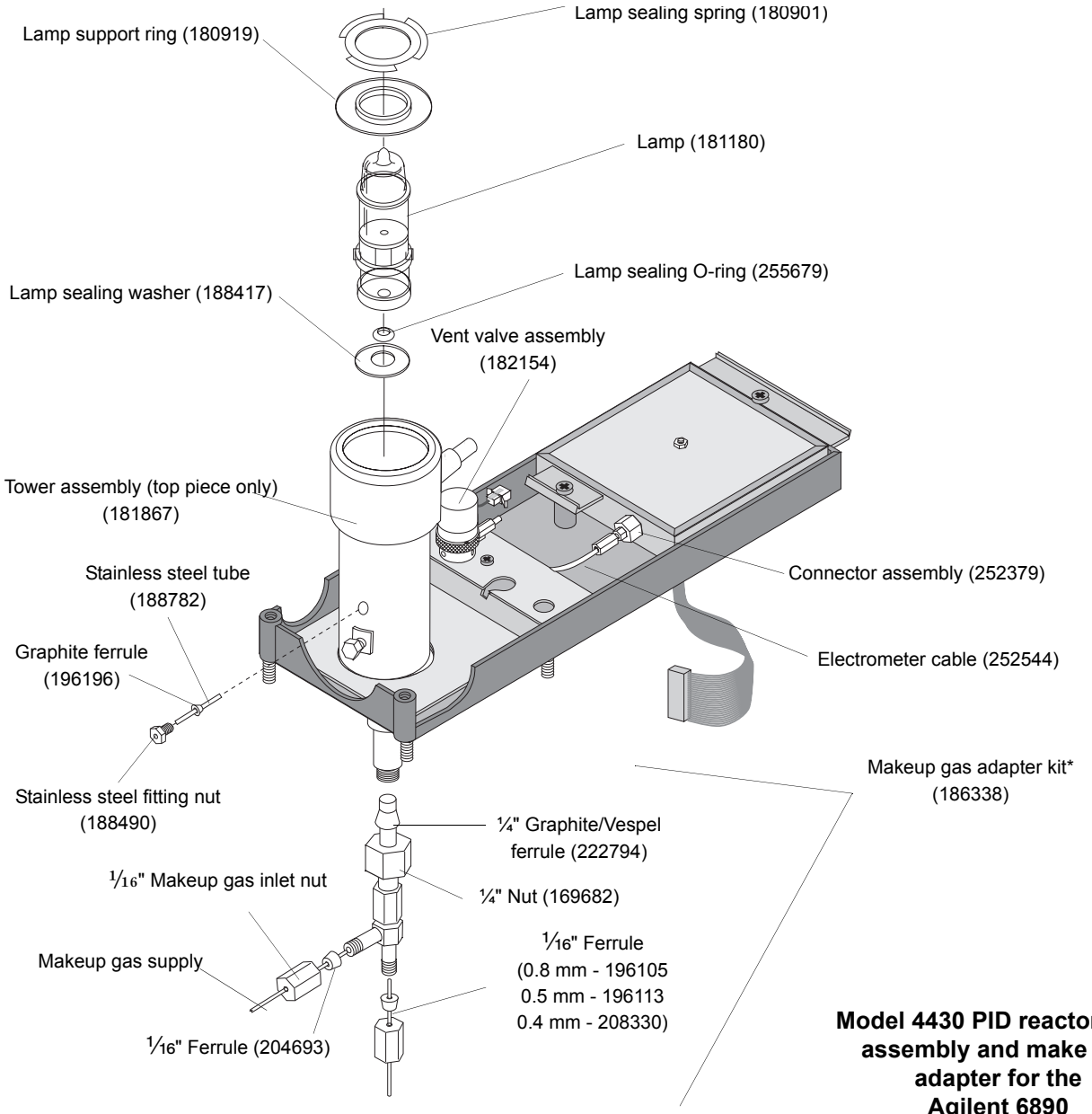

Model 4430 PID reactor base assembly and make gas adapter for the Agilent 6890

*Kit includes all parts as indicated except the ¼" nut PN 169682.

Electrolytic Conductivity Detector (ELCD) Replacement Parts and Supplies

Cables–ELCD

5320	5220	Product	Unit	PN
	■	Cell to reactor interface cable	each	216010
▲		Detector controller to cell interface cable	each	247007
▲		External events cable for Agilent 6890	each	252569
	■	Reactor power cable	each	231365
▲		Reactor power cable	each	245506
	■	Remote start cable	each	229658
▲		Signal out cable 5320 to Agilent 5890 AIB	each	246371
▲		Signal out cable 5320 to Agilent 6890 AIB	each	246389
▲		Signal out cable 5320 to Agilent integrator	each	246397
▲		Signal out cable 5320 to spades	each	246405
	■	Signal out cable, BNC to Agilent 5890 AIB	each	229641
	■	Signal out cable, BNC to Agilent 6890 AIB	each	274852
	■	Signal out cable, BNC to Agilent integrator	each	229633
	■	Signal out cable, BNC to spades	each	215962
	■	Vent valve cable for Model 5220	each	214890
▲		Vent valve cable for Model 5320 and Agilent 5890	each	242062
▲		Vent valve cable for Model 5320 and Agilent 6890/Varian 3400	each	187476

Ferrules–ELCD

5320	5220	Product	Size	Unit	PN
▲	■	Brass ferrule	1/16" tube	6/pk	223776
▲	■	Brass tube ferrule back	1/16" tube	5/pk	196162
▲	■	Brass tube ferrule front	1/16" tube	5/pk	196170

Ferrules–ELCD

5320	5220	Product	Size	Unit	PN
	■	Brass tube ferrule set	1/8" tube	10/pk	196089
▲	■	Graphite/ Vespel ferrule	1/16" x 0.8 mm	10/pk	196105
▲	■	Graphite/ Vespel ferrule	1/16" x 0.5 mm	10/pk	196113
▲	■	Graphite/ Vespel ferrule	1/16" x 0.4 mm	10/pk	208330
▲	■	Graphite/ Vespel ferrule	1/16" tube	10/pk	216366
	■	Graphite/ Vespel tube ferrule	1/32" x 0.5 mm	6/pk	255794
	■	Graphite/ Vespel tube ferrule	1/32" x 0.4 mm	1/pk	236505
	■	Graphite/ Vespel tube ferrule	1/32" x 0.8 mm	6/pk	255786
▲	■	Stainless steel ferrule	1/16" tube	5/pk	196246
▲	■	Teflon ferrule	1/16" tube	5/pk	272443

Fittings–ELCD

5320	5220	Product	Size	Unit	PN
▲	■	Knurled nut, female, stainless steel	1⁄16"	each	226357
	■	Knurled nut, male, stainless steel	1⁄32"	each	226365
▲	■	Knurled nut, male, stainless steel	1⁄16"	each	217240
	■	Nut, male, stainless steel	1⁄4"	each	178574
	■	Reactor assembly nut		each	272369
▲		Reactor base adapter nut		each	223743
▲	■	Reactor top nut, stainless steel	1⁄16"	each	227462
▲	■	Reactor top union assembly	1⁄16"	each	226464
▲	■	Union, female, stainless steel, w/ internal filter	1⁄16" tube	each	204735

Miscellaneous Parts–ELCD

5320	5220	Product	Unit	PN
▲	■	Analog input board for Agilent 6890	each	274886
	■	Cell amplifier board for Model 5220	each	259416
▲		Cell amplifier board for Model 5320	each	274266
▲	■	Cell assembly	each	234237
	■	Cell interface board for Model 5220	each	223222
▲		Controller board for Model 5300	each	266833
	■	CPU board for Model 5220	each	230565
	■	Fan assembly for Model 5200 Controller	each	216952
▲		Fan assembly for Model 5300 Controller	each	245712
	■	Model 5220 ELCD for Agilent operator's manual	each	224923
	■	Model 5220 ELCD for Varian operator's manual	each	255778

Miscellaneous Parts–ELCD

5320	5220	Product	Unit	PN
▲		Model 5320 ELCD for Agilent 5890 operator's manual	each	274969
▲		Model 5320 ELCD for Agilent 6890 operator's manual	each	278846
▲		Model 5320 ELCD for Varian operator's manual	each	307306
▲	■	Nut driver tool	each	223917

Mode Kits–ELCD

5320	5220	Product	Unit	PN
▲	■	Halogen mode kit	each	219402
▲	■	Nitrogen mode kit	each	224972
▲	■	Sulfur mode kit	each	224980

Reactor Assembly Parts–ELCD

5320	5220	Product	Size	Unit	PN
▲	■	Allen screw set	6-32, 1⁄8"	each	131961
▲	■	Alumina reaction tube for S mode		3/pk	217208
▲	■	Ferrule, brass for H and N modes	1⁄16" tube	6/pk	223776
▲	■	Ferrule, graphite/ Vespel	1⁄32" tube	6/pk	255786
▲		Ferrule, graphite/ Vespel	1⁄16" x 0.8 mm I.D.	10/ pk	196105
▲		Ferrule, graphite/ Vespel	1⁄16" x 0.5 mm I.D.	10/ pk	196113
▲		Ferrule, graphite/ Vespel	1⁄16" x 0.4 mm I.D.	10/ pk	208330
▲	■	Ferrule, graphite/ Vespel for S mode	1⁄16" tube	10/ pk	216366
▲	■	Ferrule, Teflon	1⁄16" tube	5/pk	272443
▲	■	Knurled nut, female, stainless steel	1⁄16"	each	226357

Reactor Assembly Parts–ELCD

5320	5220	Product	Size	Unit	PN
	■	Knurled nut, male, stainless steel	1/32"	each	226365
▲	■	NiCat reaction tube for halogens	3.45"	12/pk	260323
▲	■	Nickel reaction tube for nitrogen or fluorinated byproducts		6/pk	217182
▲		Nut, male, stainless steel	1/16"	each	223057
▲	■	Reactor assembly		each	227496
▲	■	Reactor base adapter		each	223743
	■	Reactor base nut	1/16"	each	272369
▲	■	Reactor base seal, graphite/Meldin		each	223933
▲	■	Reactor core		each	234187
▲	■	Reactor top fitting nut, stainless steel	1/16"	each	227462
▲	■	Teflon tubing	1/16" x 0.020 mm I.D.	foot	165896
	■	Three-way vent valve, brass/nickel, 12 V		each	179325
▲		Two-way vent valve, brass/nickel, 12 V for Agilent 5890		each	252221
▲		Two-way vent valve, brass/nickel, 24 V for Agilent 6890		each	183939
▲	■	Union, male-female, tapered, stainless steel	1/16"	each	234021
▲	■	Vent valve restrictor element		each	232173

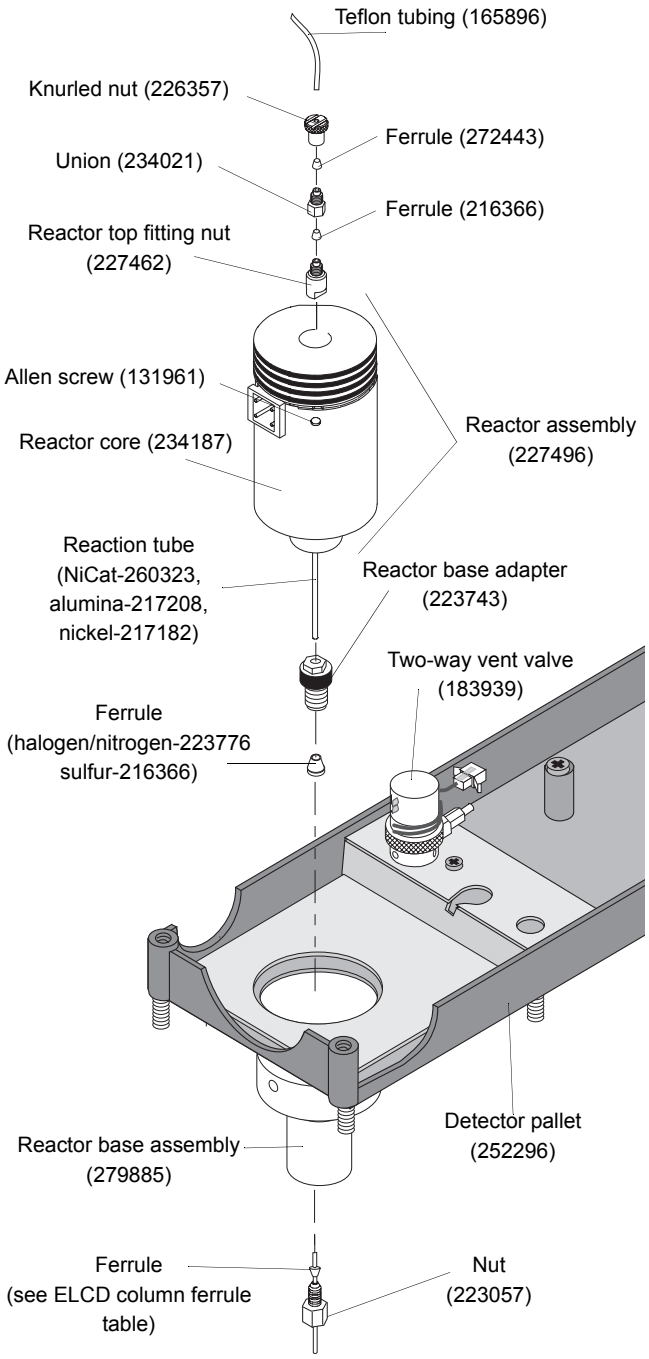

Model 5320 ELCD reactor base assembly for Agilent 6890

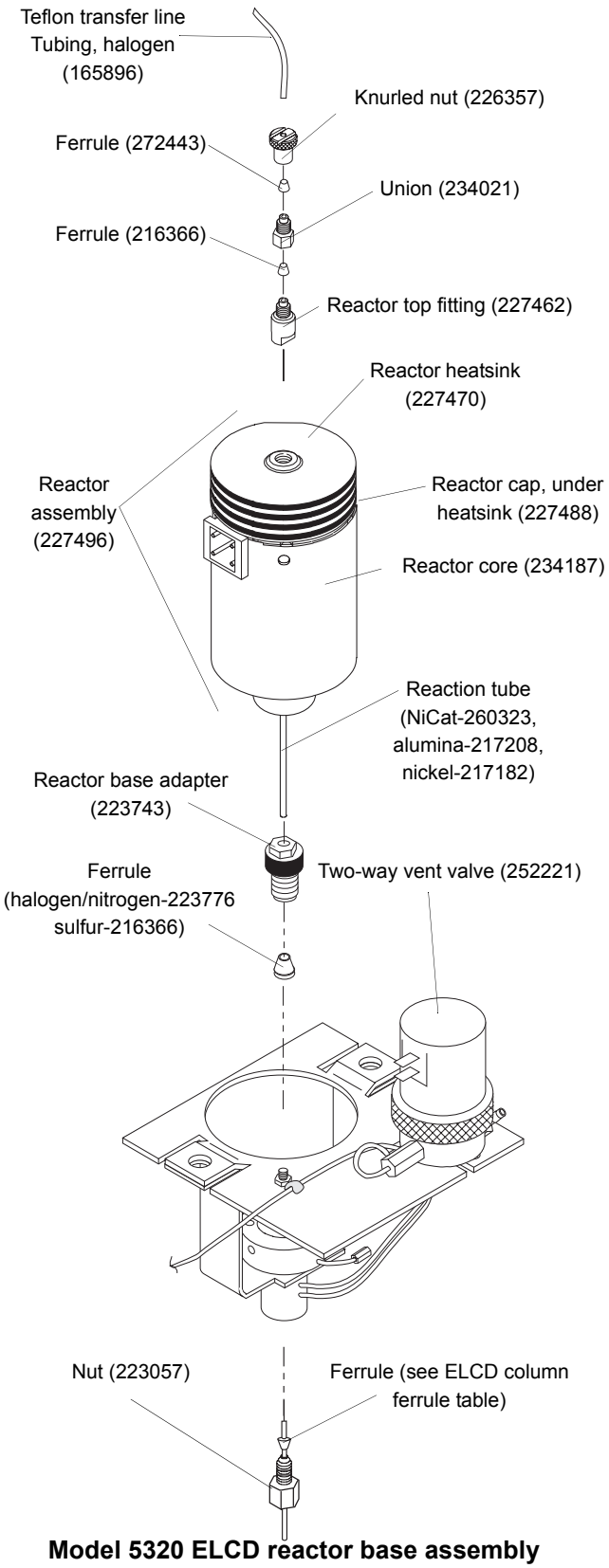

Model 5320 ELCD reactor base assembly for Agilent 5890

ELCD Column Ferrule Table

Base	Column	Ferrule I.D.	PN
1⁄32"	0.53	0.8 mm	255786
1⁄32"	0.32	0.5 mm	255794
1⁄32"	<0.32	0.4 mm	236505
1⁄16"	0.53	0.8 mm	196105
1⁄16"	0.32	0.5 mm	196113
1⁄32"	<0.32	0.4 mm	208330
1⁄6"	packed	—	—
1⁄4"	packed	—	—

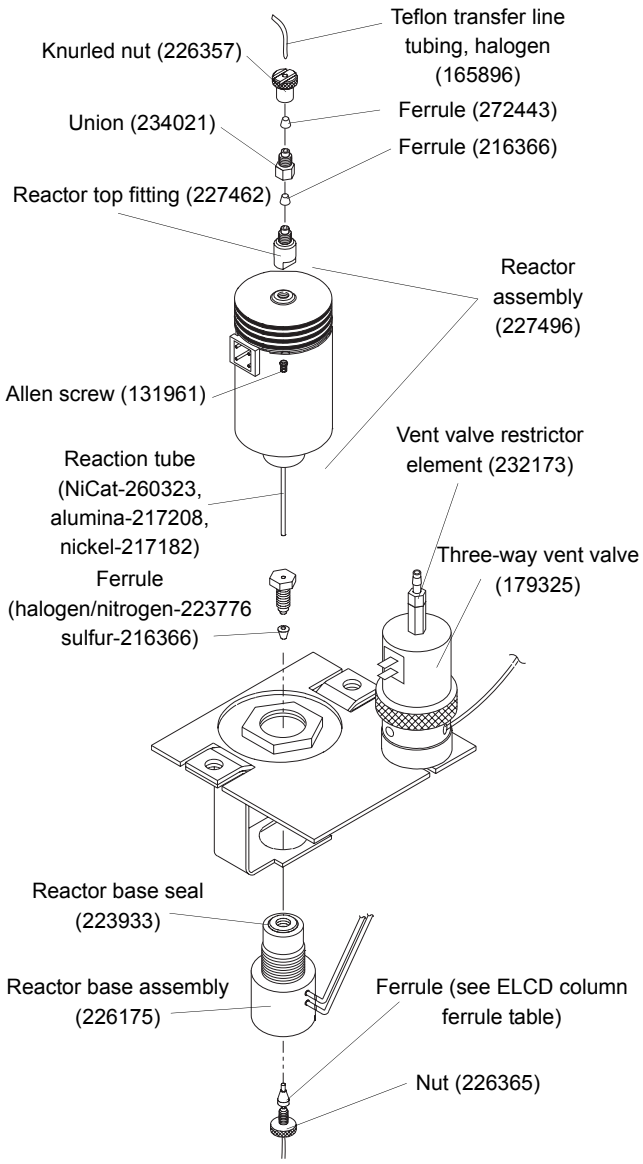

Model 5220 ELCD reactor base assembly for Agilent 5890

Resin Cartridges–ELCD

5320	5220	Product	Unit	PN
▲	■	Disposable resin cartridge for halogen mode	each	213579
▲	■	Disposable resin cartridge for nitrogen mode	each	230524
▲	■	Disposable resin cartridge for sulfur mode	each	225003

Disposable resin cartridge

Scrubber Parts–ELCD

5320	5220	Product	Size	Unit	PN
▲	■	Ferrule, Teflon	1⁄16" tube	5/pk	196220
▲	■	Knurled nut, female, stainless steel for reactor	1⁄16"	each	226357
▲	■	Nitrogen mode scrubber		each	170655
▲	■	Sulfur mode scrubber		each	170580
▲	■	Tubing, PEEK for N and S modes	1⁄16" x 0.020 mm I.D.	each	197194
▲	■	Union, female w/ nuts, stainless steel, w/ internal filter	1⁄16" tube	each	204735

Solvent System Parts–ELCD

5320	5220	Product	Unit	PN
▲	■	120-Pitch gear pump rebuild kit	each	298851
▲	■	Filter assembly	each	230953
▲	■	Solvent flow block	each	214577
▲	■	Solvent pump assembly	each	216267
▲	■	Solvent reservoir, 500 mL	each	216507

Tubing–ELCD

5320	5220	Product	Size	Unit	PN
▲	■	PEEK tubing	1⁄16" x 0.030" I.D.	foot	197202
▲	■	Silicone tubing, clear	1⁄4" x 1⁄8" I.D.	foot	179085
▲	■	Stainless steel tubing	1⁄16" x 0.030" I.D.	inch	193409
▲	■	Teflon tubing	1⁄16" x 0.007" I.D.	foot	272542
▲	■	Teflon tubing	1⁄16" x 0.020" I.D.	foot	165896
▲	■	Teflon tubing	1⁄16" x 0.031" I.D.	foot	145591
▲	■	Teflon tubing	1⁄16" x 0.38" I.D.	foot	234401

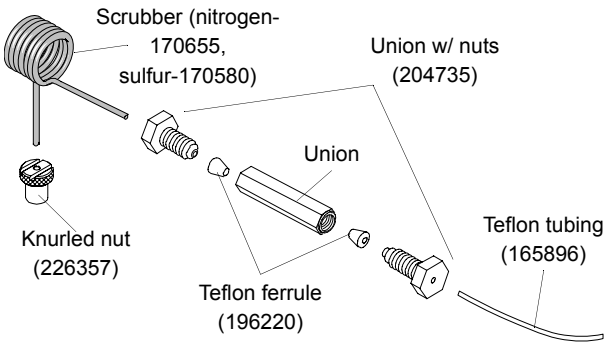

Scrubber assembly

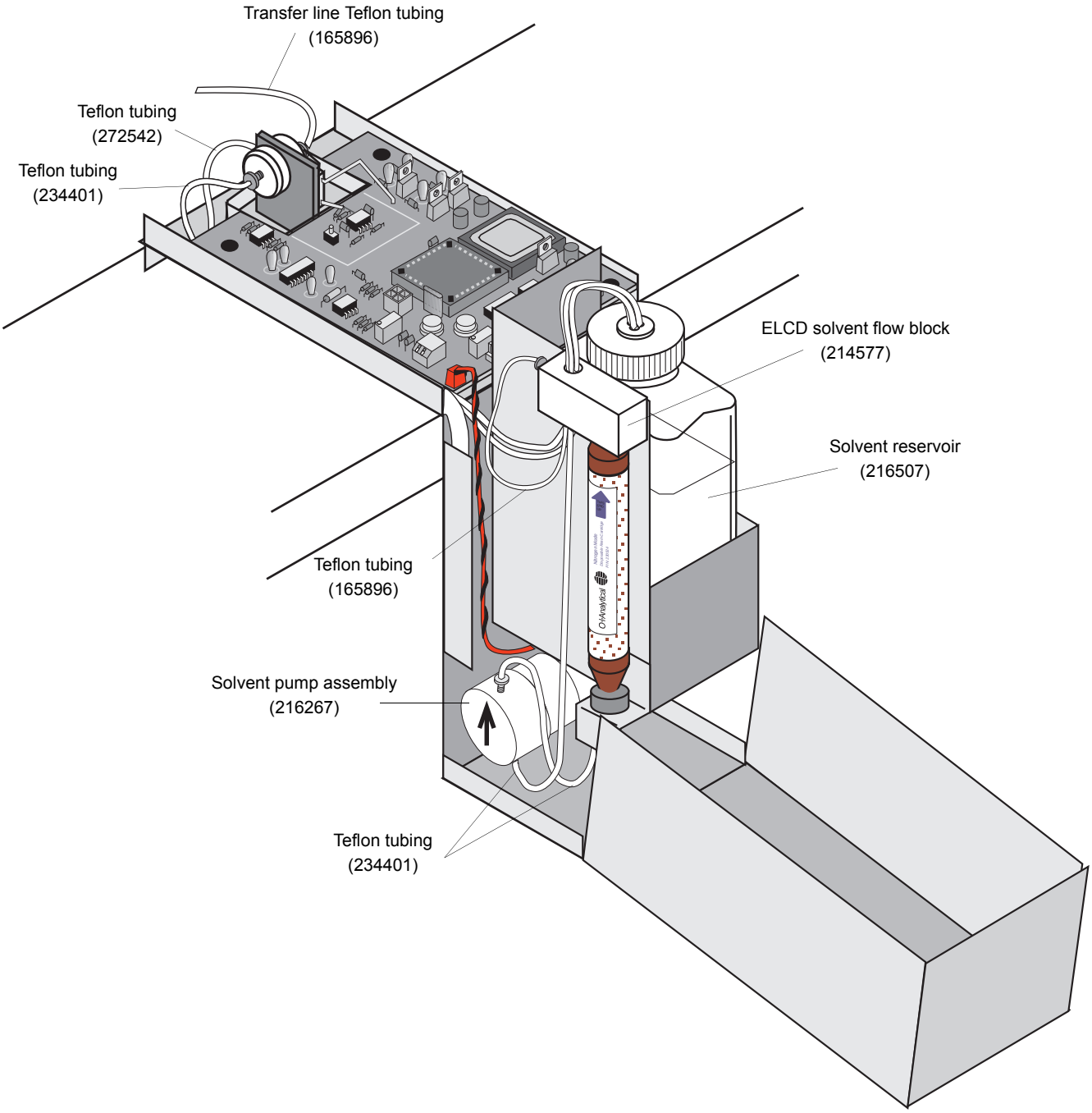

Model 5320 solvent assembly

Halogen Specific Detector (XSD) Replacement Parts and Supplies

Adapters and Miscellaneous Parts–XSD

Product	Unit	PN
Flow measurement adapter for Model 5360	each	245779
Flow measurement adapter for Model 5360A	each	319631
Jet removal tool	each	246132
5360 Venting option for Agilent 5890	each	246074
5360A Venting option for Agilent 6890	each	319514
5360 Venting option for Shimadzu 17A	each	290635
XSD operator's manual for Agilent 5890	each	246140
XSD operator's manual for Agilent 6890	each	319759
XSD operator's manual for Varian	each	307322

Cables–XSD

Product	Unit	PN
Dual vent valve cable (also requires PN 252569)	each	264234
External events cable for Agilent 6890 (also requires PN 264234)	each	252569
Heater/sensor for Model 5360A and Agilent 6890	each	252429
Reactor to controller power cable	each	245506
Signal probe to controller cable	each	245415
Vent valve power cable for Agilent 5890/Shimadzu	each	185967

Detector Assembly Parts (see drawing)–XSD

Product	Size	Unit	PN
Allen screw set	6-32, ⅛"	each	131961
Base to reactor union for Model 5360A		each	315010
Bayonet to XSD reactor union for Model 5360		each	265819
Bracket base assembly for Agilent 5890		each	265827
Bracket base assembly for Agilent 6890		each	280735
Bracket base assembly for Shimadzu 17		each	290627
Bracket base assembly for Varian 3400/3600		each	278861
Ferrule, graphite	¼" tube	10/pk	274985
Ferrule, graphite/Vespel	1⁄16" tube	10/pk	216366
Ferrule, graphite/Vespel	1⁄16" x 0.3 mm I.D.	10/pk	218644
Ferrule, graphite/Vespel	1⁄16" x 0.4 mm I.D.	10/pk	208330
Ferrule, graphite/Vespel	1⁄16" x 0.5 mm I.D.	10/pk	196113
Ferrule, graphite/Vespel	1⁄16" x 0.8 mm I.D.	10/pk	196105
Jet connector nut	5⁄16"		263897
Jet tube, glass lined for Model 5360	1⁄16"	each	245621
Jet tube, nonventing for Model 5360A		each	319774
Jet tube, venting for Model 5360A		each	283168
Nut, male, stainless steel	1⁄16"	each	223057
O-ring, Kalrez®, 5360		each	271155
Probe assembly		each	251744
Reactor assembly (includes reactor cap, case, and core)		each	273615
Reactor cap		each	265769
Reactor case		each	265744
Reactor core		each	251751
Two-way vent boost valve, brass/nickel, 24 V, 5360A		each	245886
Two-way vent exit valve, brass/nickel, 24 V, 5360		each	183939

Detector Assembly Parts (see drawing)–XSD

Product	Size	Unit	PN
Vent valve option for Model 5360		each	246074
Vent valve option for Model 5360A		each	319514
Washer, aluminum, 5360A	0.695 x 0.566 x 0.032	each	319510

Model 5360A XSD reactor base assembly for Agilent 6890

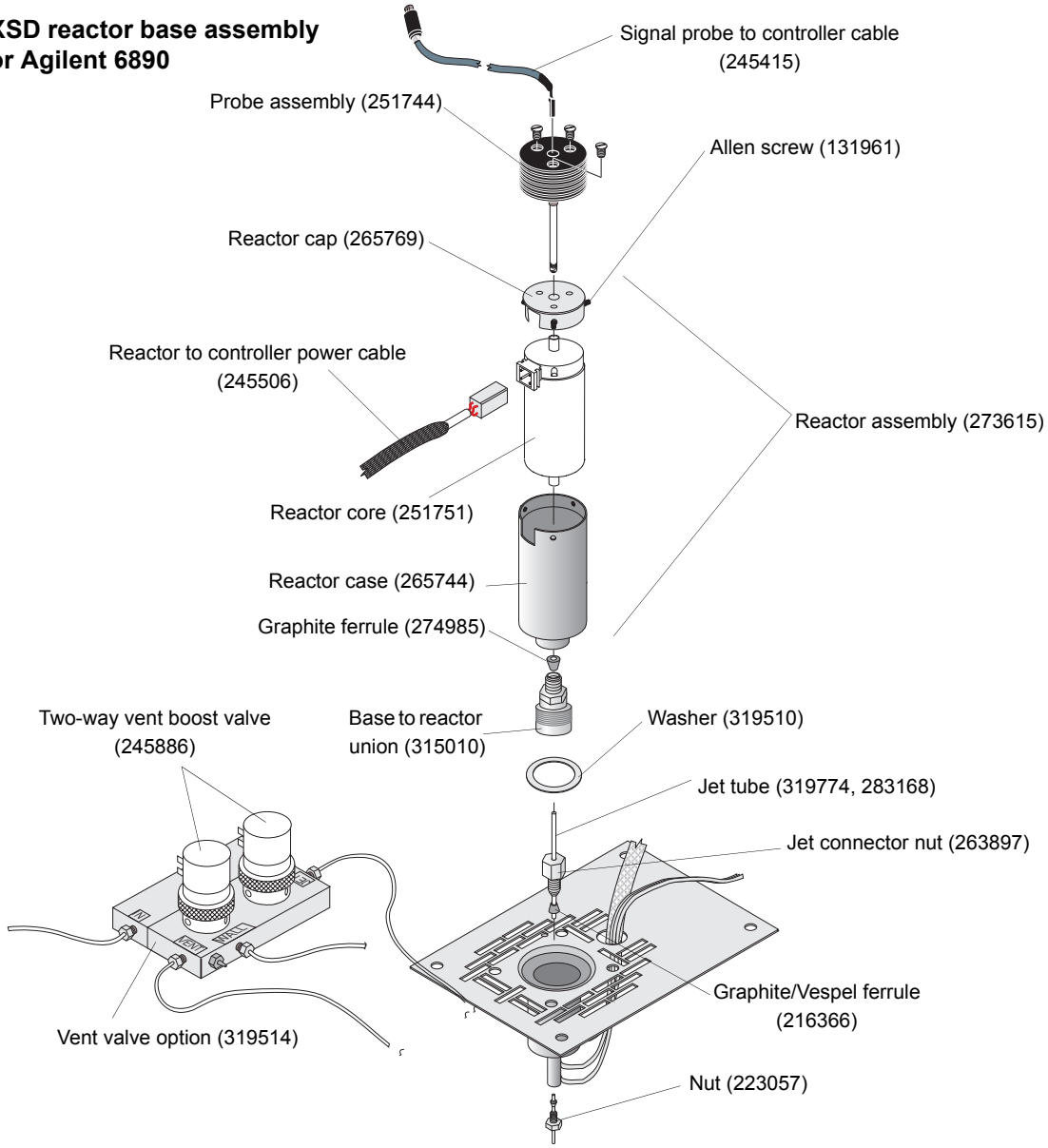

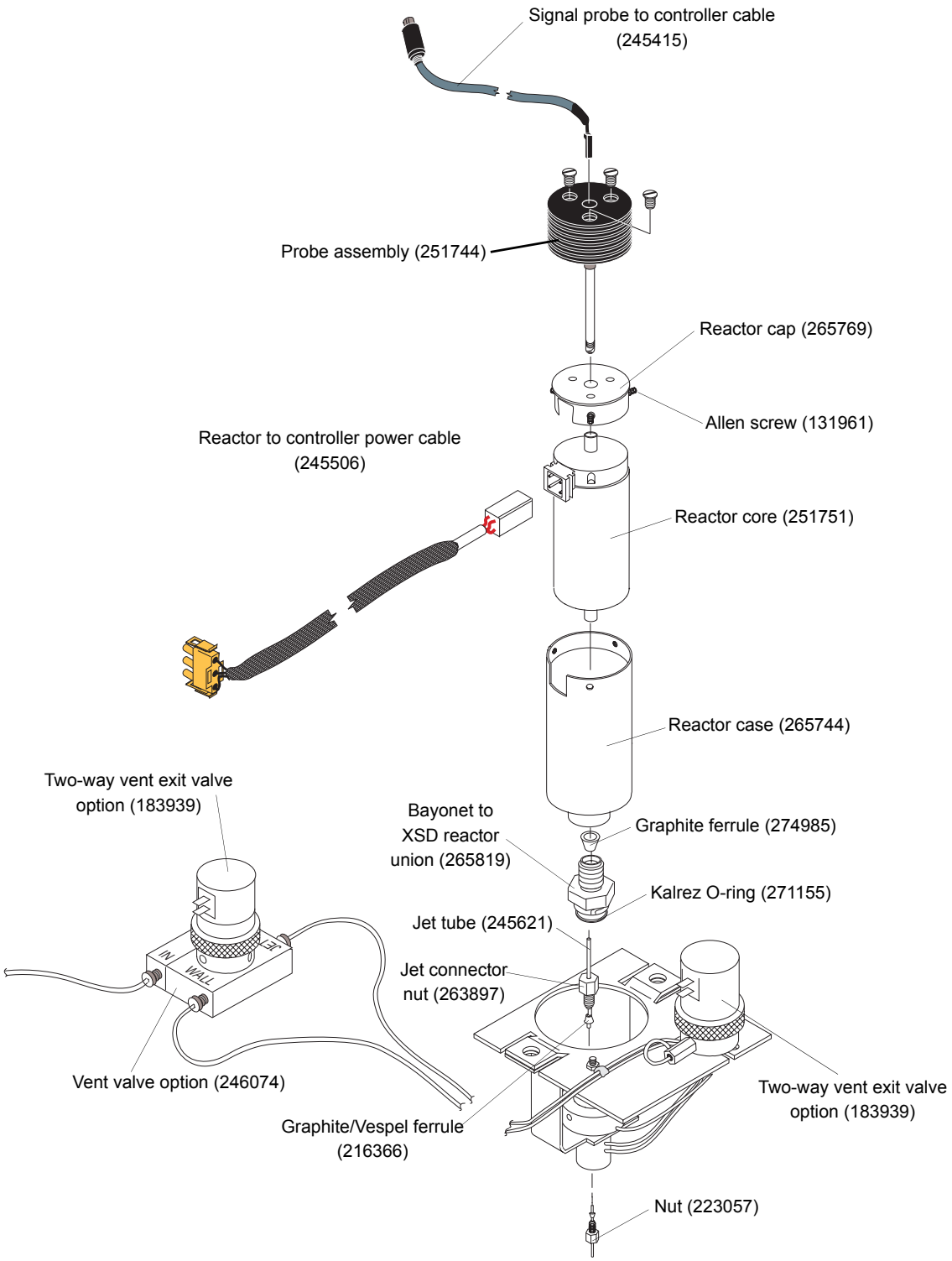

XSD reactor base assembly for Agilent 5890

Tandem PID/ELCD and Tandem PID/XSD Replacement Parts and Supplies

Tandem PID/ELCD

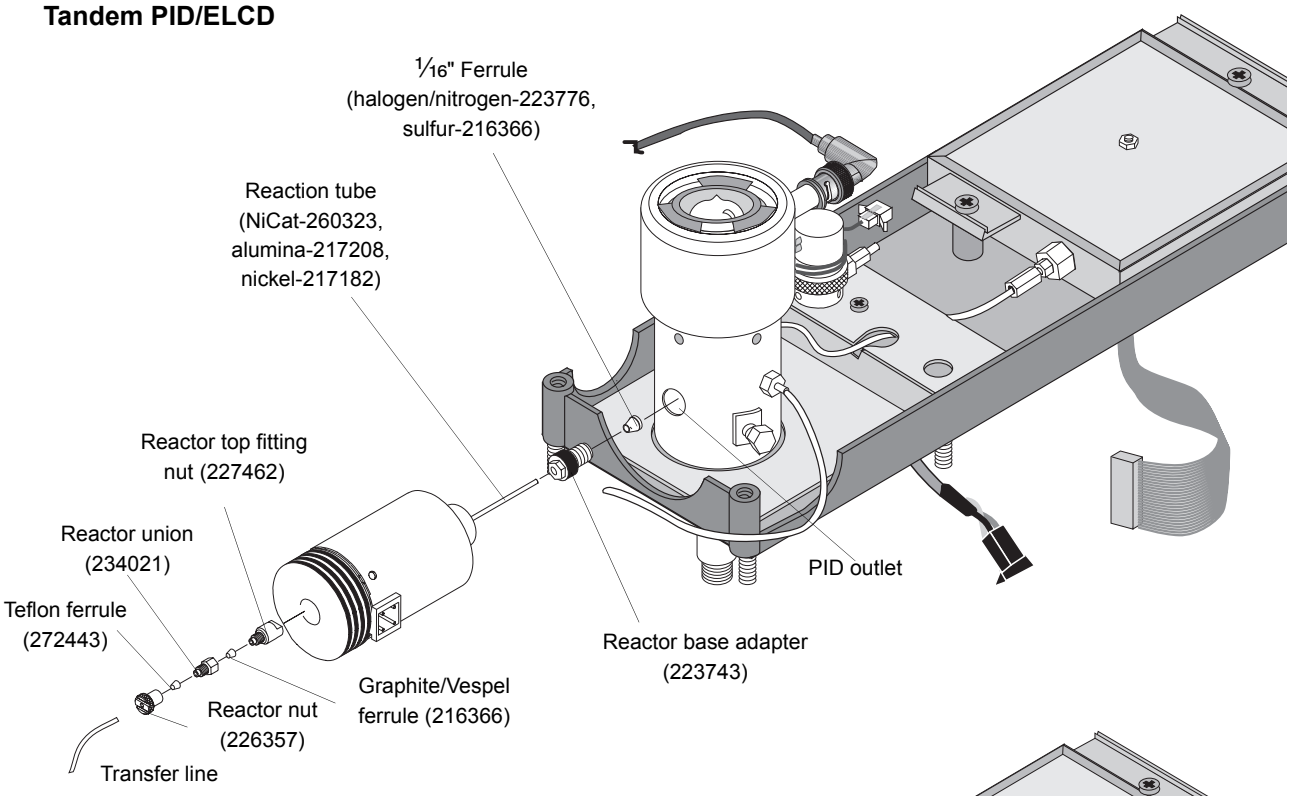

Tandem PID/XSD

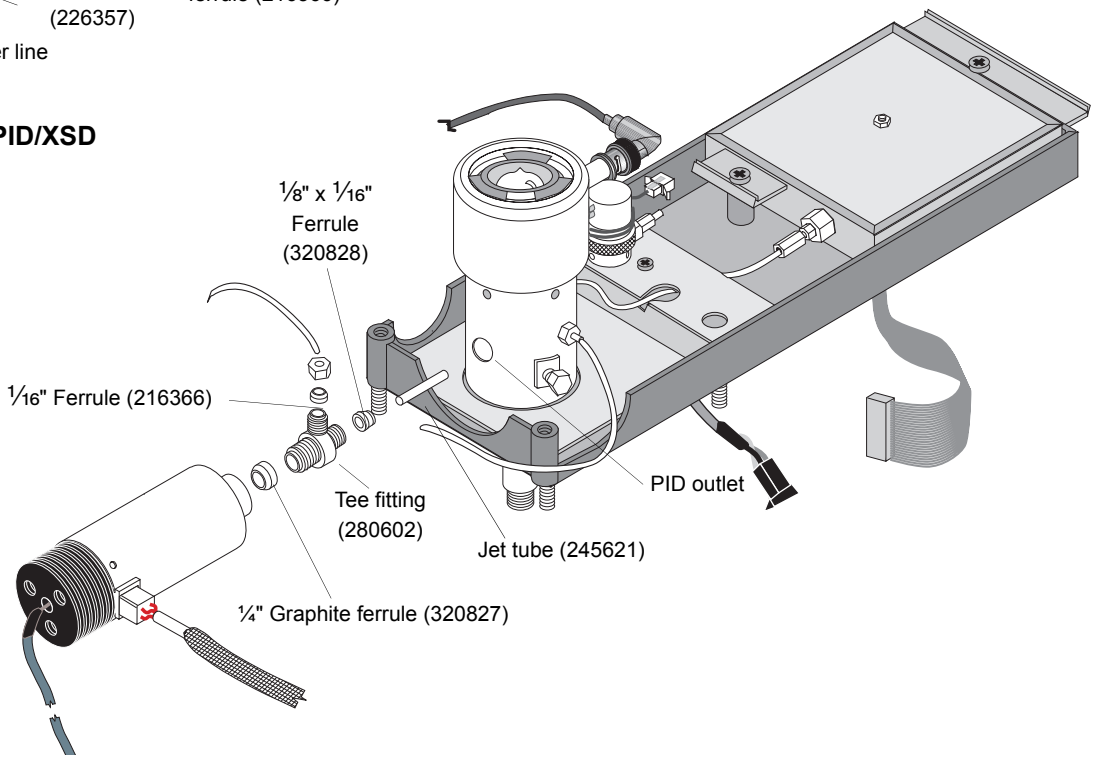

Pulsed Flame Photometric Detector (PFPD) Replacement Parts and Supplies

Cables–PFPD

Product	Unit	PN
Analog out signal cable for Agilent 6890	each	252551
Dual remote start Y-cable	each	322236
External event cable for Agilent 6890	each	252569
Handshake cable for Agilent 5890	each	185868
Heater assembly cable for Agilent 5890	each	178954
Heater/thermocouple assembly cable for Agilent 6890	each	252429
Heater assembly cable for Shimadzu 17A, 110 V	each	244814
Heater assembly cable for Shimadzu 17A, 240 V	each	299933
Heater assembly cable for Trace 2000, 110 V	each	319817
Heater assembly cable for Trace 2000, 220/240 V	each	320383
Ignitor assembly cable	each	282624
PFPD remote start cable for Agilent 6890 and 5890	each	288902
PFPD remote start cable for Shimadzu 17A	each	288977
Power cord for North America, 110 V	each	116038
RS-232 9-pin to 9-pin serial cable for WinPulse software, 10 ft	each	226621
RS-232 9-pin to 9-pin serial cable for WinPulse software, 25 ft	each	316893
Signal output cable to Agilent 5890 AIB	each	229641
Signal output cable to Agilent 6890 AIB	each	274852
Signal output cable to Agilent integrator	each	229633
Signal output cable to spade lugs	each	215962
Temperature sensor assembly cable for Agilent 5890	each	170093
Temperature sensor assembly cable for Trace 2000	each	319816

Ferrules–PFPD

Product	Size	Unit	PN
Graphite/Vespel ferrule	1/16" plug	10/pk	197079
Graphite/Vespel ferrule	1/16" x 0.4 mm tube	10/pk	208330
Graphite/Vespel ferrule	1/16" x 0.3 mm tube	10/pk	218644
Graphite/Vespel ferrule	1/16" x 0.5 mm tube	10/pk	196113
Graphite/Vespel ferrule	1/16" x 0.8 mm tube	10/pk	196105
Graphite/Vespel ferrule	1/16" x 1/16" tube	10/pk	216366
Stainless steel ferrule	1/8" tube	each	112441

Fittings–PFPD

Product	Size	Unit	PN
Barbed hose adapter	10-32 x 1/16"	each	202077
Column nut fitting	1/16"	each	223057
Nut fitting, male, stainless steel	1/8"	each	112458
Tee fitting, male	1/16"	each	282509

Gas Flow Control–PFPD

Product	Unit	PN
Air gas flow controller, 60 mL	each	282475
AUX EPC gas flow module for Agilent 6890	each	275974
Gas flow module kit, PFPD for Agilent 6890 (use w/PN 275974)	each	286344
Hydrogen gas flow controller, 25 mL	each	282483
Needle valve, Nupro®	each	282491
OIM EPC gas flow module for Agilent 6850*	each	312595
OIM EPC gas flow module for Agilent 6890	each	312678

*Requires PN 285049.

Miscellaneous Parts–PFPD

Product	Unit	PN
Allen wrench	each	284539
Column positioning tool	each	318949
Combustor extractor tool, 2 mm	each	280719
Combustor extractor tool, 3 mm	each	280727
Dimethyl disulfide permeation tube	each	290452
Dimethyl methyl phosphonate permeation tube	each	290460
Fuse, 1.25 amp, Slo-Blo	each	298984
Green LED w/ cable	each	284414
PFPD operator's manual	each	283101
PFPDView software	each	312330
Phosphorus permeation device kit w/ permeation tube	each	290429
Red LED w/ cable	each	245894
Sulfur permeation device kit w/ permeation tube	each	290411
Teflon-coated forceps	each	283051
WinPulse software	each	286302

PFPD Sensor Assembly

Product	Size	Unit	PN
Combustor	2 mm	each	282939C
Combustor	3 mm	each	282913C
Combustor kit	3 mm	each	282905
Combustor sleeve		each	283093C
Combustor support	2 mm	each	280461C
Combustor support	3 mm	each	280453C
Combustor support washer, aluminum	0.395"	10/pk	288076
Detector base service kit		each	301325
Detector body service kit		each	301333
Detector cap		each	246900
Flame arrestor		each	286393
Light pipe		each	282608C
Light pipe clamp		each	245563C
Mounting plate for Agilent 5890		each	245464
Mounting plate for Agilent 6890		each	280735
Mounting plate for Shimadzu 17A		each	285916
Mounting plate for Trace 2000		each	319809

PFPD Sensor Assembly

Product	Size	Unit	PN
Optical filter, BG-12, purple		each	282947
Optical filter, BG-3		each	302919
Optical filter, BG-39, blue		each	290015
Optical filter, GG-495, yellow		each	282921
Optical filter, RG-695, black		each	290007
Optical filter, UV-34, clear		each	310623
O-ring for light pipe, Viton	0.156"	5/pk	288068
O-ring, Viton, for PMT housing	0.926"	5/pk	288084
Photomultiplier housing assembly		each	286096
Photomultiplier thumbscrew	6-32 x ¼"	each	177065
Photomultiplier tube, R1924 (standard)		each	284364
Photomultiplier tube, R1925		each	290049
Photomultiplier tube, R5070		each	290106
Screw	6-32 x 1"	each	295295C
Screw	6-32 x ¾"	each	295287C
Screw	6-32 x ¼"	each	295279C
Screw		each	252585
Screw, stainless steel	M4-0.7 x 8 mm	each	169963
Screw, Torx	M4 x 10 mm	each	252585
Washer, aluminum	1"	10/pk	288050

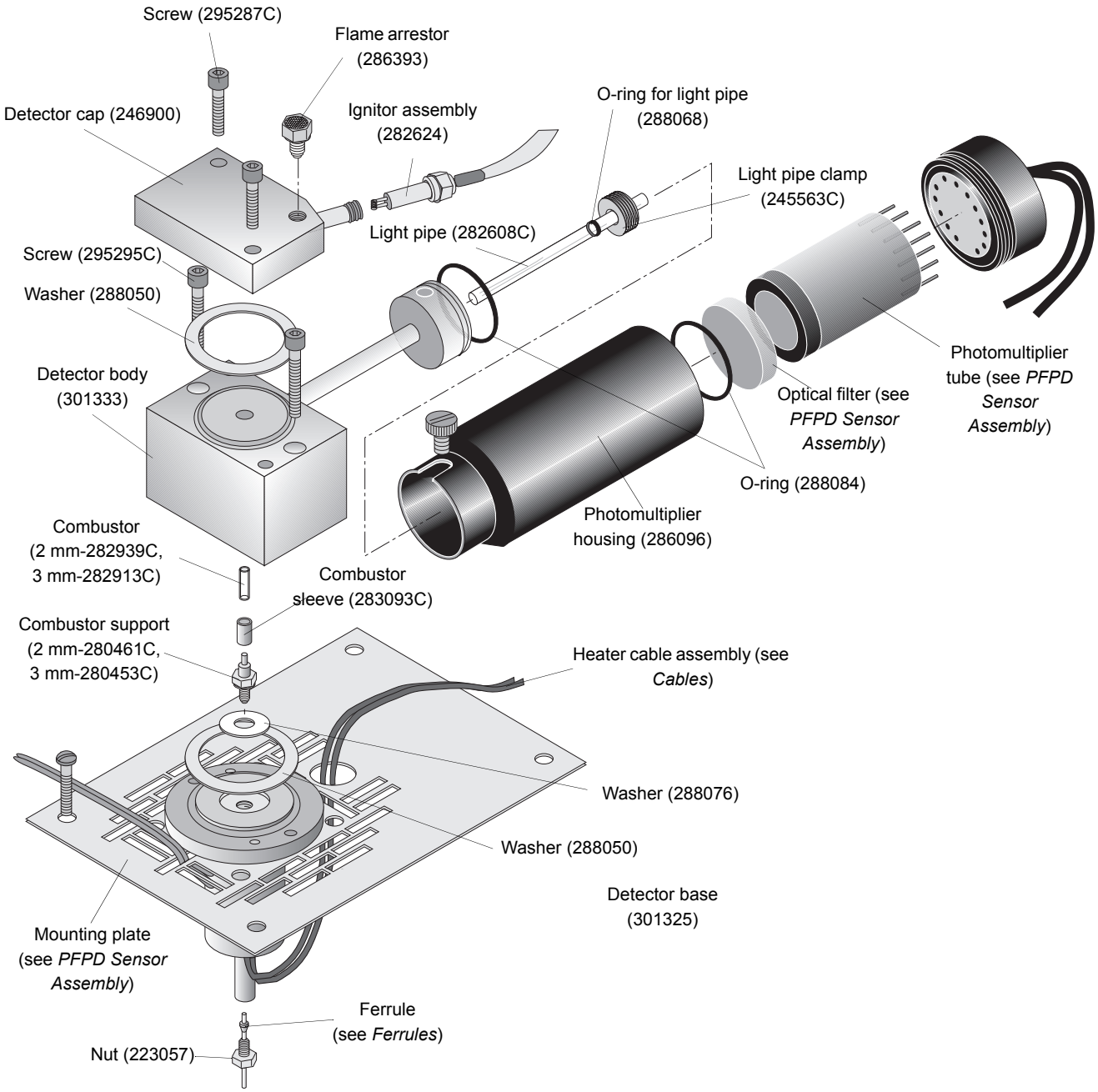

Model 5380 PFPD detector assembly

Flame-Ionization Detector (FID) Replacement Parts and Supplies

Model 4410 FID Assembly Parts

Product	Size	Unit	PN
Adapter, brass/nickel	1/16" tube	5/pk	196352
Allen screw set	6-32, 1/8"	each	131961
Base O-ring, Viton		5/pk	210278
Coaxial cable connector		each	191791
Coaxial electrometer cable	6.5"	each	206110
Coaxial electrometer cable	9"	each	285908
Collector electrode		each	191825
Ferrule, back, brass	1/16" tube	5/pk	196162
Ferrule, front, brass	1/16" tube	5/pk	196170
Ferrule, graphite	1/8" x 1/16" tube	5/pk	196196
FID base		each	191767
FID body casing		each	191759
Flame jet	1/16" O.D. x 0.3 mm I.D.	each	191817
Gas module to ignitor cable		each	191916
Gasket, BUNA	0.297 x 0.125 x 0.020"	each	308882
Glow plug assembly cable (ignitor pigtail cable)		each	191833
Lock washer, stainless steel	#2	each	134080
Lower FID body ferrule, Vespel		each	191783
Nut, male, brass/nickel	1/16"	5/pk	196303
Screw, stainless steel	2-56, 3/16"	each	144361
Upper FID body ferrule, Vespel		each	191775

Model 4410 FID Miscellaneous Parts

Product	Unit	PN
Analog signal cable (0-1 V), 5890	each	185850
Analog signal cable, 6890	each	252551
Detector standard, 100 ppm	each	222919
Electrometer connector assembly for Agilent 5890	each	193797
Electrometer connector assembly for Agilent 5890	each	252379
Ignitor power cable for Agilent 5890	each	191866
Ignitor power cable for Agilent 6890	each	279703
Manifold O-ring, Viton	12/pk	185116
Model 4410 FID operator's manual	each	192229
Model 4410 FID subassembly	each	191742
PID/FID gas module kit, two line for Agilent 5890	each	192013
Tube, copper, 1/8" x 0.070 mm I.D.	each	111427

Model 4415 FID Assembly Parts

Product	Size	Unit	PN
Adapter, brass/nickel	1/16" tube	5/pk	196352
Allen screw set	8-32 x 1/4	each	199950
Bias voltage cable for Shimadzu 17A		each	284620
BNC connector assembly		each	283267
BNC to BNC electrometer cable		each	284646
Cable, analog for Varian 3400/3600		each	193235
Collector electrode		each	246751
Collector insulator		each	246744
Curved spring washer		each	283176
Ferrule, back, brass	1/16" tube	5/pk	196162
Ferrule, front, brass	1/16" tube	5/pk	196170
FID base fitting		each	246728
FID base O-ring, silicone	0.364 x 0.70	each	283218
FID body casing		each	246736

Model 4415 FID Assembly Parts

Product	Size	Unit	PN
FID jet	0.3 mm I.D.	each	283168
FID jet ferrule, Vespel		each	283150
Ignitor cable for Shimadzu 17A		each	284638
Ignitor/bias cable for Varian		each	283283
Nut fitting, male, brass/ nickel	1⁄16"	5/pk	196303
O-ring, silicone		5/pk	217760
Retaining ring, stainless steel		each	283192
Tubing, copper	1⁄8 x 0.070 I.D.	foot	111427
Tubing, stainless steel	1⁄16" x 0.020"	foot	111732

Model 4415 FID Miscellaneous Parts

Product	Unit	PN
Allen wrench, 5⁄64"	each	284521
Detector standard, 100 ppm	each	222919
Model 4415 FID operator's manual	each	283242
Model 4415 subassembly	each	283226
Retaining ring pliers	each	283200

Customer Communications

Have a question about our instruments or an application? Call us about onsite specific applications training and hands-on seminars. Call us at our toll-free technical support hotline (800) 336-1711.

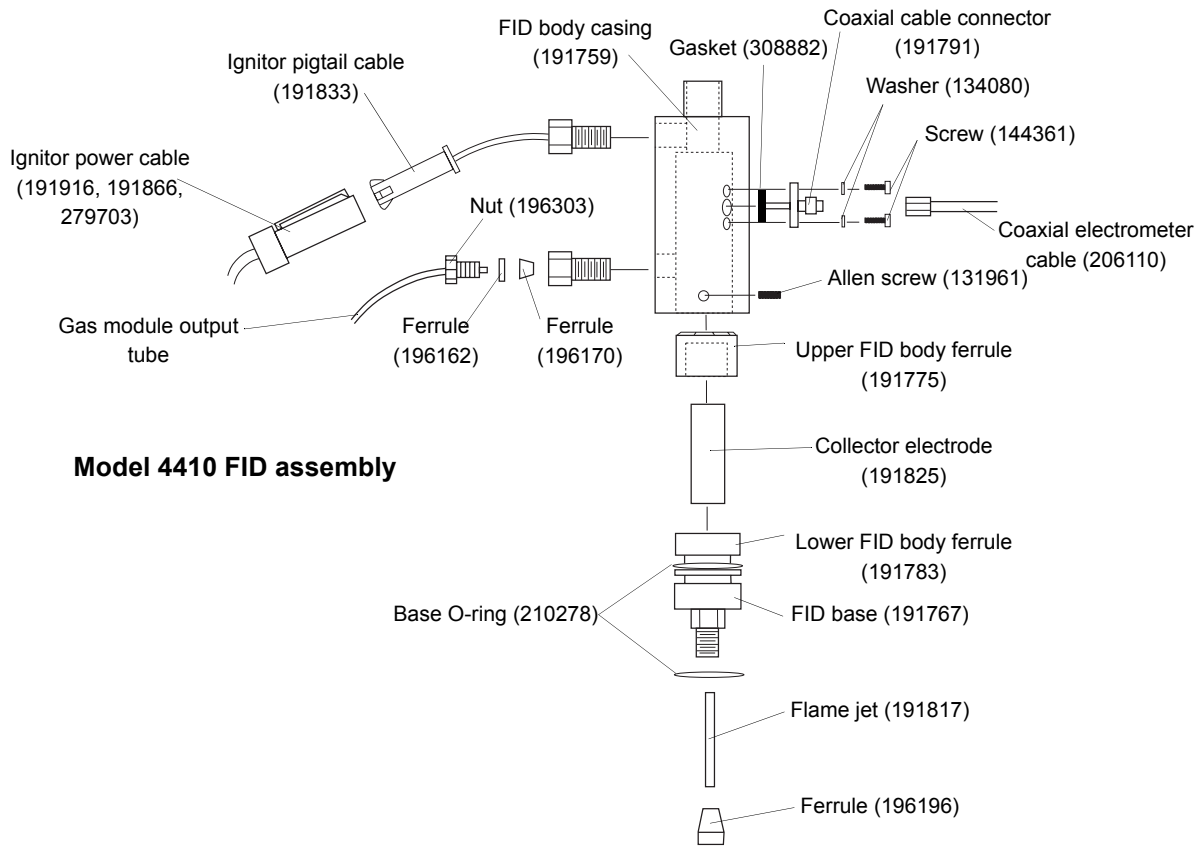

Model 4410 FID assembly

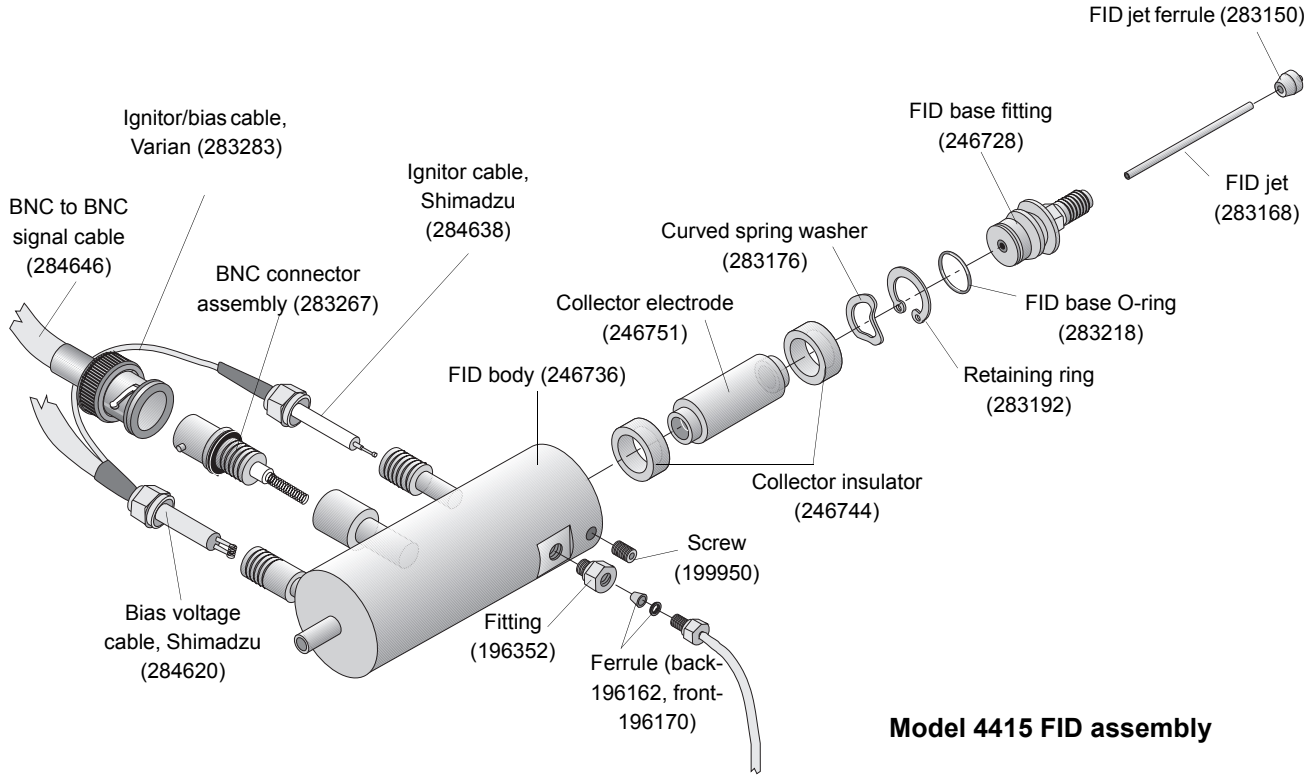

Model 4415 FID assembly

GC Analytical System Replacement Parts and Supplies

How to order

OI Analytical makes ordering easier than ever. Order by mail, telephone, fax, or e-mail.*

Mail: OI Analytical
Order Entry Department
P.O. Box 9010
College Station, TX 77842-9010

Phone: (800) 673-3750
(979) 690-1711

Fax: (979) 690-0440

E-mail: orders@oico.com

When ordering, please provide the following:

- Contact name, company name, account number, shipping and billing addresses, and telephone number(s).
- Your company's purchase order number or credit card number (Visa, MasterCard, AMEX).
- OI Analytical part number, description, and quantity of item(s) ordered.
- Tax exemption number (if applicable).

* International customers should contact the OI Analytical distributor in their area. For a list of distributors, visit our website at ***www.oico.com***. If a distributor is not available, contact OI Analytical International Sales directly at (979) 690-1711 for distributor information.

Cleaning Supplies

Product	Unit	PN
Micro all purpose cleaner	each	259945
PID lamp cleaning kit	each	214924

Columns and Column Supplies

Product	Size	Unit	PN
BTEX column kit	30 m x 0.53 mm I.D. x 1.5 µm (Rtx-5); 30 m x 0.53 mm I.D. x 1.5 µm (Stabilwax®) column splitter	each	187765
Column cutter, ceramic		3/pk	206888
Column splitter, stainless steel	0.8 mm	each	193847
DB 624 column	30 m x 0.53 mm I.D. x 3.0 µm	each	203059
DB 624 column	75 m x 0.53 mm I.D. x 3.0 µm	each	203067
DB VRX column	20 m x 0.18 mm I.D. x 1.0 µm	each	320839
DB VRX column	30 m x 0.25 mm I.D. x 1.4 µm	each	320840
DB VRX column	60 m x 0.25 mm I.D. x 1.4 µm	each	319458
DB VRX column	60 m x 0.32 mm I.D. x 1.8 µm	each	316851
DB VRX column	75 m x 0.45 mm I.D. x 2.55 µm	each	259986
GS-GasPro® column	30 m x 0.32 mm	each	319451
GS-GasPro column	60 m x 0.32 mm	each	319452
Pesticide column kit	30 m x 0.32 mm I.D. x 0.25 µm Rtx®-5); 30 m x 0.32 mm I.D. x 0.25 µm (Rtx-35) column fittings	each	192831
Rtx-1 column	105 m x 0.53 mm I.D. x 3.0 µm	each	236240
Rtx-5 column	30 m x 0.32 mm I.D. x 0.25 µm	each	193318
Rtx-5 column	30 m x 0.53 mm I.D. x 1.5 µm	each	188193
Rtx-35 column	30 m x 0.32 mm I.D. x 0.25 µm	each	193326
Rtx-VMS column	20 m x 0.18 mm I.D. x 1.0 µm	each	320842
Rtx-VMS column	30 m x 0.25 mm I.D. x 1.4 µm	each	320841
Stabilwax column	30 m x 0.53 mm I.D. x 1.5 µm	each	188201

Note: OI Analytical reserves the right to substitute columns without notice with exact replacements from other vendors.

Boards

Product	Unit	PN
Analog input board (AIB) for Agilent 6890	each	274886
Analog input board (AIB) for Agilent 5890	each	187716K
Dual channel electrometer	each	194910
Single channel electrometer	each	194720
PID or FID electrometer card for Agilent 6890 (may require PN 274878)	each	274860
PID or FID interface card for Agilent 6890	each	274878
PID or FID electrometer card for Agilent 5890	each	187344

Fuses

Product	Instrument	Unit	PN
0.5 amp fuse, AGC	Model 4430	each	115469
1.25 amp fuse, Slo-Blo®	Model 5380/ AMPS	each	298984
2 amp fuse, AGC	Model 4551/ 5200	each	211441
2 amp fuse, GMA	Model 4551A/ 1051	each	177453
3 amp fuse, AGC	CFM	each	115519
3.15 amp fuse, Slo-Blo/T	Model 4560/ 4551/1010/ Solids	each	257329
6.3 amp fuse, GDC	Model 4560/ Eclipse	each	249177

Gas Flow Modules–Agilent 6890

Product	Unit	PN
PCM (EPC) pneumatics control module kit, inlet	each	285015
OIM EPC gas flow module	each	285049
OIM EPC gas flow module for PFPD	each	312686
Auxiliary EPC flow module	each	275974

Gas Flow Modules–Agilent 5890

Product	Unit	PN
One-line gas flow module for Model 5320 ELCD	each	225037

Gas Flow Modules–Agilent 5890

Product	Unit	PN
Two-line gas flow module for Model 5320 ELCD/ELCD	each	232371
Two-line gas flow module for Model 5350 PID/ELCD	each	187302
Three-line gas flow module for Model 4450 PID/FID	each	192013

Leak Detection

Product	Size	Unit	PN
Leak hunter, portable, detects nonflammable gases		each	258418
Snoop® leak detector	8 oz squirt bottle	each	129767

Manuals and Guides

Product	Unit	PN
Automated Multipoint Process Sampler (AMPS) operator's manual	each	311761
Cryo-Focusing Module operator's manual	each	202879
DPM-16/MHC-16 operator's manual	each	248393
Dual Channel Electrometer and SCE operator's manual	each	206839
Eclipse Sample Concentrator operator's manual	each	321604
Fluorinated By-Products Analyzer operator's manual	each	301119
Low-Dead-Volume Injector (LDVI) installation/maintenance guide (Agilent 6890)	each	280586
Low-Dead-Volume Injector installation/maintenance guide (Agilent 5890)	each	236414
Model 4410 Flame-Ionization Detector operator's manual	each	192229
Model 4415 Flame-Ionization Detector operator's manual	each	283242
Model 4430 Photoionization Detector operator's manual (Agilent 5890/ Varian 3400)	each	186678
Model 4430 Photoionization Detector operator's manual (Agilent 6890)	each	252320
Model 4430 Photoionization Detector operator's manual (Varian 3800)	each	302943
Model 4551 Autosampler operator's manual	each	235895
Model 4551A Autosampler operator's manual	each	310565
Model 4552 Water/Soil Autosampler operator's manual	each	285007
Model 4560 Sample Concentrator operator's manual	each	227959
Model 5320 Electrolytic Conductivity Detector operator's manual (Agilent 5890)	each	274969
Model 5320 Electrolytic Conductivity Detector operator's manual (Agilent 6890)	each	278846
Model 5320 Electrolytic Conductivity Detector operator's manual (Varian 3400/3800)	each	307306
Model 5360 Halogen Specific Detector operator's manual (Agilent)	each	246140
Model 5360 Halogen Specific Detector operator's manual (Varian)	each	307322
Model 5360A Halogen Specific Detector operator's manual	each	319759
Model 5380 Pulsed Flame Photometric Detector operator's manual	each	283101

Manuals and Guides

Product	Unit	PN
PFPDView operator's manual	each	311019
PT Express operator's manual	each	320538
Standards Addition Module (SAM) installation/maintenance guide	each	284976
WinTrap *Plus* operator's manual	each	307470

Most manuals are provided electronically as PDF on CD.

Power Cords

Country or Region	Voltage	Unit	PN
Australia	220/230 VAC	each	249276
China	220 VAC	each	249276
European continent	220/230 VAC	each	249284
Greenland	220 VAC	each	249300
India	220–250 VAC	each	249318
Ireland	220 VAC	each	249268
New Zealand	230 VAC	each	249276
North America	120 VAC	each	116038
South Africa	220–250 VAC	each	249318
United Kingdom	240 VAC	each	249268

Scrubbers

Product	Unit	PN
GC trap, Ambersorb®/carbon molecular sieve (ELCD)	each	196816
Hydrocarbon canister trap, ⅛"	each	197848
Scrubber, in-line molecular sieve	each	258897

Standards

Product	Contents	Unit	PN
BTEX standard	100 ppm in methanol	each	222885
Method 502.2 gas/ nongas standard	100 ppm in methanol	each	222901
Method 502.2 standard	100 ppm in methanol	each	222919
Pesticide standard	(γ-BHC, chlorpyrifos, diazinon, lindane, azobenzene, thimet, atrazine)	each	222893

Syringes

Product	Size	Unit	PN
Gas tight syringe	10.0 µL, 2" needle	each	188003
Syringe	10.0 µL, 2" needle	each	167545
Syringe	5.0 mL, 2" needle	each	169327
Syringe	10.0 mL, 2" needle	each	169335
Sample syringe w/ Luer-Lok®	25.0 mL		172461
Sample syringe w/ Luer-Lok	5.0 mL	each	177659

Tools

Product	Unit	PN
Ferrule and septum extractor	each	231167
Nut driver, hollow, ¼"	each	223917
Reamer, small	each	258368
Wrench, 1⅛" sparge	each	227975

Tubing

Product	Size	Unit	PN
Copper tubing	⅛" x 0.070" I.D.	foot	111427
DB-1 tubing, precolumn	0.53 mm I.D.	5/pk	226134
Deactivated fused silica tubing, precolumn	0.53 mm I.D.	5/pk	202754
Nickel tubing	1⁄16" x 0.020" I.D.	foot	165531
Nickel tubing	1⁄16" x 0.030" I.D.	foot	253054
PEEK® tubing	1⁄16" x 0.020" I.D.	foot	197194
PEEK tubing	1⁄16" x 0.030" I.D.	foot	197202
Silicone tubing, clear	¼" x ⅛" I.D.	foot	179085
Stainless steel tubing	1⁄16" x 0.020" I.D.	foot	111732
Stainless steel tubing	1⁄16" x 0.030" I.D.	inch	193409
Stainless steel tubing	1⁄16" x 0.040" I.D.	foot	111864
Stainless steel/ Silcosteel® tubing	1⁄16" x 0.020" I.D.	inch	184978
Stainless steel/ Sulfinert® tubing	1⁄16" x 0.020" I.D.	foot	319638
Stainless steel/ Sulfinert tubing	1⁄16" x 0.040" I.D.	foot	319639
Teflon® tubing	1⁄16" x 0.007" I.D.	foot	272542
Teflon tubing	1⁄16" x 0.010" I.D.	foot	139065
Teflon tubing	1⁄16" x 0.020" I.D.	foot	165896
Teflon tubing	1⁄16" x 0.031" I.D.	foot	145591
Teflon tubing	1⁄16" x 0.038" I.D.	foot	234401
Teflon tubing	⅛" x 0.030" wall	foot	147901
Urethane tubing, clear	⅛" x 1⁄16" I.D.	foot	166224

Customer Communications

Have a question about our instruments or an application? Call us about onsite specific applications training and hands-on seminars. Call us at our toll-free technical support hotline (800) 336-1711.

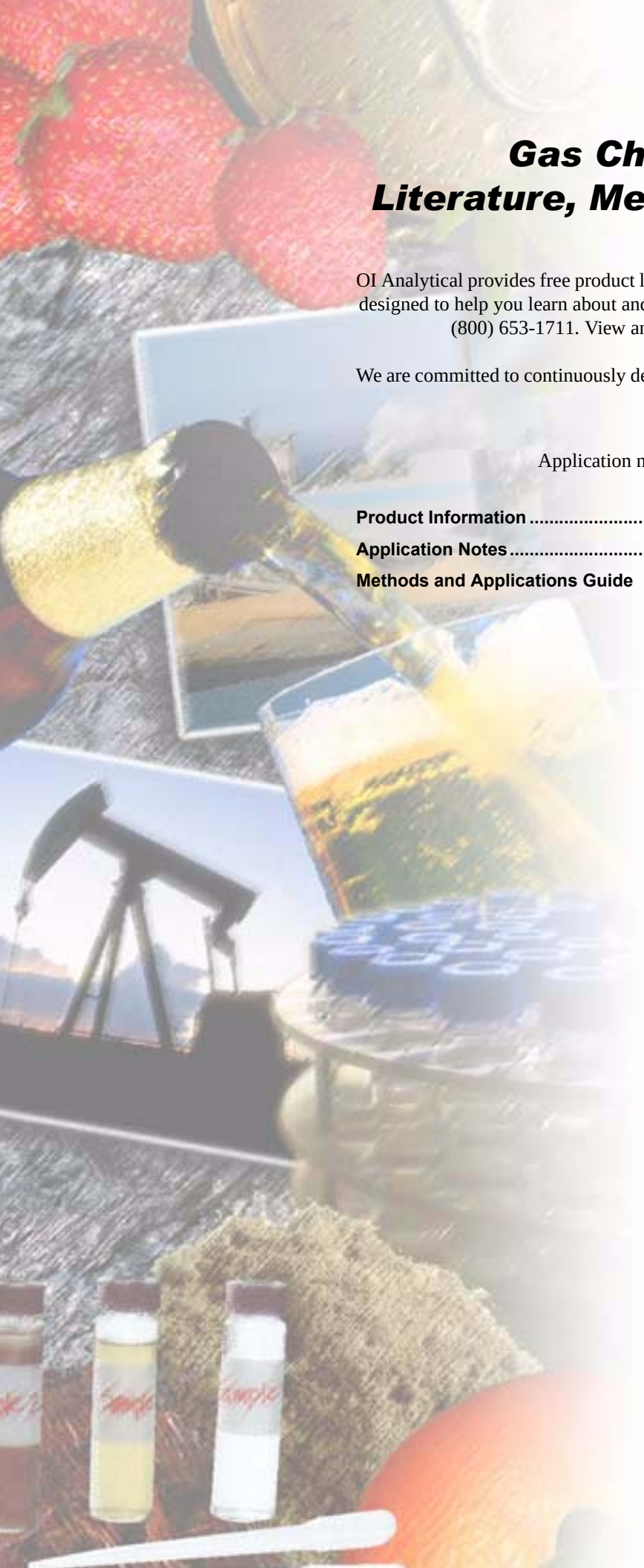

Gas Chromatography Products Literature, Methods, and Applications

OI Analytical provides free product literature, technical application notes, and maintenance tips designed to help you learn about and use OI Analytical instruments. Request copies by calling (800) 653-1711. View and download literature from our website at ***www.oico.com***.

We are committed to continuously developing new applications. Please call us or visit us on the web for the most current application note listing.

Application notes with an asterisk (*) are only available on the website.

Product Information **124**

Application Notes **126**

Methods and Applications Guide **132**

Product Information

Air Analysis	0135	Air-Tube Desorber accessory specifications (for use with Models 4460A and 4560 Series Sample Concentrators)
	0393	VOST accessory specifications (for use with MPM-16 and DPM-16 autosamplers)
Autosamplers	0756	Model 4552 W/S Autosampler specifications
	1436	Model 4551A Vial Autosampler specifications
Detectors (GC)	0233	Model 4450 PID/FID Tandem Detector Configuration specifications
	0243	Model 4430 Photoionization Detector (PID) specifications
	0697	Model 5360/5360A Halogen Specific Detector (XSD™)specifications
	0700	Model 5320 Electrolytic Conductivity Detector (ELCD) specifications
	0740	Model 5380 Pulsed Flame Photometric Detector (PFPD) specifications
	0880	Model 5390 PID/XSD Tandem Detector Configuration specifications
	1047	Model 5350 PID/ELCD Tandem Detector Configuration specifications
	1435	PFPDView (Model 5380 PFPD control software) specifications
Fluorinated By-Products Analyzer	1120	Fluorinated By-Products Analyzer (FBA) specifications
GC Systems	0104	Pesticides...from Cleanup to Analysis
	0554	Model FM-2000 GC Monitoring System specifications (for continuous air monitoring)
	0690	GC Volatiles Systems specifications
	1700	S-PRO 3200 Series GC System for Sulfur Analysis brochure
Maintenance and Support Information	1725	Customer and Technical Support Services brochure

Purge-and-Trap Sample Concentrators

1029	MicroTrap™ for Purge and Trap specifications
1338	Automated Multipoint Process Sampler (AMPS) specifications
1573	Standards Addition Module (SAM) specifications
1811	PT Express™ Dual Purge-and-Trap Interface brochure
1917	Eclipse™ Purge-and-Trap Sample Concentrator specifications
1944	Model 4660 Eclipse Purge-and-Trap Sample Concentrator brochure

Sample Preparation

0104	Pesticides...from Cleanup to Analysis
1463	GPC AutoPrep 2000 specifications
1717	WinSEP™ (GPC AutoPrep 2000 control software) specifications
1734	Gel Permeation Chromatography (GPC) Cleanup Systems brochure
1770	AIM500 Block Digestion System specifications
1789	Model SP 2000 specifications
2065	UVD-1000 UV Detector/Chart Recorder specifications

Application Notes

BTEX/Hydrocarbon Analysis

0047*	Determination of Hydrocarbon's Class Using PID/FID
0048	Hydrocarbon Confirmation Analysis Using PID/FID
0054*	New PID/FID for GC
0506	An Analyzer for the Rapid Analysis of BTEX and GRO in Water and Soil
0887	Rapid Sample Screening for BTEX in Soils Using Static Headspace/GC/Flame-Ionization-Photoionization Detection
1105	BTEX Analysis Using Static Headspace with Gas Chromatography/Mass Spectrometry
1442	Analysis of BTEX in Soil and Water Matrices by USEPA Method 5021 Using the Model 4632M Headspace Autosampler
2074	Petrochemical Application Support Library

Pesticides/PCB Analysis

0068	Chlorinated Pesticide Detection Using ELCD
0080	Selective Detection of PCBs in Transformer Oil Using ELCD
0129*	OI Analytical Applications: Model 4420 Pentachlorophenol
0130	Applications for Model 4420 ELCD: PCBs in Transformer Oil
0192	Applications of ELCD for Selective Detection of Halogen, Nitrogen, and Sulfur Pesticides
0222*	Screening Pesticides and PCBs
0273	Maintaining Optimal Performance of the ELCD in Pesticides and PCB Analysis
0357*	The Introduction of an Improved ELCD for Gas Chromatographic Analysis of Pesticides
0437	A System Configuration for Dual Method, Simultaneous Analysis of Volatile and Semivolatile Organic Compounds by GC
0441*	Maintaining a Dual Column, Dual ELCD GC System for Extended Analysis of Multi-Residue Pesticide Extracts
0457*	Analysis of Organochlorine Pesticide Residues Using Simultaneous Injection of Two Capillary Columns with Electron Capture and Electrolytic Conductivity Detectors
0503*	Comparative Analysis of Propargite by FPD- and ELCD-Equipped Gas Chromatograph
0614	An Alternative Method for the Determination of *n*-Methyl Carbamates in Milk

0982	Analysis of USEPA Method 608 Chlorinated Pesticides Using the OI Analytical XSD
1076	A New Pulsed Flame Photometric Detector for the Analysis of Pesticides
1079	Analysis of Chlorinated Pesticides Using Gas Chromatography with a Halogen Specific Detector
1174	Analysis of Polychlorinated Biphenyls Using Gas Chromatography with a Halogen Specific Detector
1195	Analysis of Organophosphorus Pesticides Using Gas Chromatography with Pulsed Flame Photometric Detection
1379	Multi-element Analysis of Pesticides Using GC Systems Equipped with Multiple Selective GC Detectors (*Pittcon 1999*)
1546	Analysis of a Complex Garlic Extract for Chlorinated Pesticides Using the OI Analytical Model 5360 Halogen Specific Detector
1764	Analysis of Sulfur-Containing Carbamate Pesticides Using a Pulsed Flame Photometric Detector (*Pittcon 2002*)
2054	Using the GPC AutoPrep 2000 System for Cleanup of Olive Oil Prior to Pesticides Analysis by GC/XSD or GC/PFPD (*Pittcon 2004*)

Purge-and-Trap/VOC Analysis

0083	Positive Identification of Purgeable Halocarbons
0106	Analysis of VOCs in Water Using Ion Trap Detector
0146*	Analysis of Volatile Compounds in Drinking Water
0230	Finally! Totally Automated Volatiles Analysis Using Interactive Purge-and-Trap Communications and Control with the PC
0285	Detection Limits and Analysis Time Using Wide and Narrow Bone Capillary Columns for Purge-and-Trap GC/MS Analyses
0294	Using the OI Analytical Cryo-Focusing Module to Optimize Purge-and-Trap Chromatography with Small-Bore Capillary Columns
0297	Volatile Organics Analysis: Building a State-of-the-Art Purge-and-Trap GC/MS System
0403	Use of a Cryo-Focusing Module as a Water Management Tool in Purge-and-Trap/GC/MS Analysis
0404	Efficiency of Cryo-Focusing Traps for Purge-and-Trap Gas Chromatography
0405	Theory and Operation of Water Management Methods in Purge-and-Trap Gas Chromatography
0406	A Comparison of Sample Heating Techniques Used in Purge-and-Trap Gas Chromatography

0409	Operation of Purge-and-Trap Systems in the Real World: Performance and Pitfalls
0420	OI Analytical Model 4560 Sample Concentrator- Cyclone Water Management System
0433	A Low-Dead-Volume Injector for Both Semi-Volatile and Volatile Gas Chromatographic Analysis
0442	An Automated GC/MS System for the Analysis of Volatile and Semivolatile Organic Compounds in Water
0444	Model 4560 Sample Concentrator-Sample Heating Techniques
0451	Advantages of the OI Analytical Tenax/Silica Gel/Carbon Molecular Sieve (#10) Trap
0452	OI Analytical Model 4560 Sample Concentrator-Rapid Trap Heating
0506	An Analyzer for the Rapid Analysis of BTEX and GRO in Water and Soil
0518	Cycle Time as a Productivity Factor in Purge-and-Trap Analysis
0525	GC/MS Analysis of Volatiles in Less Than 15 Minutes!
0653	“Trends in Purge and Trap” Journal of Chromatographic Science, August 1994
0775	Parameter Optimization to Eliminate the Need for Cryogenic Focusing in Purge and Trap/Gas Chromatography/Mass Spectrometry
0875	A New Purge-and-Trap Sample Concentrator Optimized for Low Desorb Flow Operation
0983	Purge-and-Trap Analysis of Trihalomethanes
1008	A New MicroTrap for Purge-and-Trap Sample Concentration
1024	Maximize P&T/GC/MS Productivity with the MicroTrap
1077	A New Standard Additions Module for Purge-and-Trap Autosampling
1103	Purgeable Halogenated Hydrocarbon Analysis Using Static Headspace with Gas Chromatography/Mass Spectrometry
1104	Purgeable Aromatic Hydrocarbon Analysis Using Static Headspace with Gas Chromatography/Mass Spectrometry
1106	Low-Level Purgeable Aromatic Hydrocarbon Analysis Using Static Headspace with Gas Chromatography/Mass Spectrometry
1107	Trihalomethane Analysis Using Static Headspace Gas Chromatography/Mass Spectrometry
1173	High Speed Purge-and-Trap/Gas Chromatographic Analysis of BTEX Samples

1285 Proper Trap Selection for the OI Analytical Model 4460A Purge-and-Trap Sample Concentrator

1286 Proper Trap Selection for the OI Analytical Model 4560 Purge-and-Trap Sample Concentrator

1327 USEPA Method 524.2 Revision 4: Optimization of the Analysis of VOAs in Water by GC/MS

1358 Analysis of Environmental Endocrine Disrupters Using the OI Analytical Model 4560 Purge-and-Trap Sample Concentrator and GC/MS-SIM Detection

1371 Shorter Purge-and-Trap Desorption Times with Direct Trap Heating (*Pittcon 1999*)

1377 Description of a New Multipoint Water Sampler for Continuous, On-line Sampling and Analysis of VOCs by Purge and Trap/GC (*Pittcon 1999*)

1388 Acetaldehyde in Polyethylene Terephthalate (PET) Using the Air-Tube Desorber Accessory

1412 Low-Level Volatiles in Soil and Water by USEPA Method 5035 Using the Model 4552 Water/Soil Autosampler (*Pittcon 2000*)

1418 Blood Alcohol Analysis Using the Model 4632M Headspace Autosampler

1420 Blood Alcohol Determination Using the Model 4632M Headspace Autosampler and PLOT Column

1426 Analysis of Methyl *tert*-Butyl Ether (MTBE)

1432 Analysis of Organic Pollutants in the Pharmaceutical Industry Using USEPA Method 1666 (*Pittcon 2000*)

1440 Analysis of Toner Resin Polymers Using the Model 4632M Headspace Autosampler

1441 Identification of Flavors and Fragrances by Purge-and-Trap GC/MS

1445 Analysis of Organic Solvents in Pharmaceutical Products Using United States Pharmacopoeia (USP) Method 467 (*Pittcon 2000*)

1454 Improved Volatile Organic Compound Analysis Using a New Vial Autosampler for Water Matrices (*Pittcon 2000*)

1618 Low-Level Sulfur Compounds in Beer by Purge and Trap with a Pulsed Flame Photometric Detector (PFPD)

1735 Geosmin and 2-Methylisoborneol by Purge and Trap (*Pittcon 2002*)

1743 Improved Performance and Productivity of Purge-and-Trap Analyses (*Pittcon 2002*)

1908 Reduced VOC Sample Analysis Times Using a New Dual Purge-and-Trap System (*Pittcon 2003*)
includes OI Analytical Recommended Purge-and-Trap Operating Conditions

1912 Introducing the Eclipse: A New Generation of Purge-and-Trap Sample Concentrators (*Pittcon 2003*)

1932 Fast Cycle Times for VOC Analyses: The Whole Story

1934 The Eclipse Purge-and-Trap Sample Concentrator Initial Laboratory Test Results, Part I

1937 The Eclipse Purge-and-Trap Sample Concentrator Initial Laboratory Test Results, Part II

1996 Analysis of Fuel Oxygenates Using the Eclipse Purge-and-Trap Sample Concentrator (*Pittcon 2004*)

Selective Detectors

0511 Applications of the ELCD for the Selective Detection of Halogenated Contaminants in Petroleum Products

0767 A New Halogen Specific Detector: The Model 5360 XSD

0788 Determination of Semivolatile Organic Compounds in Soils Using Thermal Extraction/GC/PID/ELCD

1127 Using Dual Gate Subtraction to Enhance the Selectivity of a Pulsed Flame Photometric Detector (PFPD)

1166 Model 5380 PFPD Photomultiplier Tube and Optical Filter Configurations

1172 Halogen and Compound Dependence of Response of an Electrolytic Conductivity Detector for Gas Chromatography

1253 Organo-Tin Analysis by Capillary Gas Chromatography

1373 Optimization of a Pulsed Flame Photometric Detector for Nontraditional Elements (*Pittcon 1999*)

1379 Multi-element Analysis of Pesticides Using GC Systems Equipped with Multiple Selective GC Detectors (*Pittcon 1999*)

1426 Analysis of Methyl *tert*-Butyl Ether (MTBE)

1502 Determination of Volatile Sulfur Compounds in Beverages Using Static Headspace and Pulsed Flame Photometric Detection

1546 Analysis of a Complex Garlic Extract for Chlorinated Pesticides Using the OI Analytical Model 5360 Halogen Specific Detector

1618 Low-Level Sulfur Compounds in Beer by Purge and Trap with a Pulsed Flame Photometric Detector (PFPD)

1656 Using the Halogen Specific Detector (XSD) as an Alternative to the ELCD in USEPA Methods (*Pittcon 2001*)

1711 Options for Quantifying Sulfur Compounds by PFPD

1762 Initial Experiences from the Field with the OI Analytical S-PRO 3200 GC System (*Pittcon 2002*)

	1763	Determination of Total Sulfur Content in Petrochemical Samples Using a Pulsed Flame Photometric Detector (PFPD) (*Pittcon 2002*)
	1764	Analysis of Sulfur-Containing Carbamate Pesticides Using a Pulsed Flame Photometric Detector (*Pittcon 2002*)
	1801	"The Future of GC Detectors in the Era of Mass Spectrometer Detection," American Laboratory, October 2001
	1901	A Newly Approved ASTM Standard for Analysis of Thiophene in Benzene using a Pulsed Flame Photometric Detector (*Pittcon 2003*)
	1906	Analysis of Sulfur-Containing Flavor Compounds by GC/MS with a Pulsed Flame Photometric Detector (*Pittcon 2003*)
	2074	Petrochemical Application Support Library
Field and Mobile Monitoring	0673	Mobile Field Monitoring Using the Model FM-2000: A System Description and Operations Guide
	0674	Monitoring for Volatile Organic Compounds (VOCs) Using the FM-2000 Continuous Air Monitoring Systems
Maintenance and Support Information	0051	Model 4430 PID Troubleshooting for High Baseline
	0158	Vent Valve Configurations for ELCD
	0176	Model 4460A/HP-MSD Cable Interface
	0190	Service Pesticide Standard
	0206*	PID Window Cleaning
	0284	Model 4420 Cell Cleaning Procedure
	0374*	ELCD Transfer Line Rinsing
	1166	Model 5380 PFPD Photomultiplier Tube and Optical Filter Configurations
	1285	Proper Trap Selection for the OI Analytical Model 4460A Purge-and-Trap Sample Concentrator
	1286	Proper Trap Selection for the OI Analytical Model 4560 Purge-and-Trap Sample Concentrator

Methods and Applications Guide

Application	Technique	Method	Detectors	System	Sample Introduction	Sample Preparation
Air pollution/ industrial hygiene	Ammonia by automated visible spectrometry	NIOSH 6015				
Air pollution/ industrial hygiene	Aromatic hydrocarbons by gas chromatography (GC)	NIOSH	Flame-Ionization Detector (FID), Photoionization Detector (PID)/ FID			Solvent desorption, thermal desorption
Air pollution/ industrial hygiene	BTEX/TPH	USEPA TO-1, TO-2	PID, PID/ Halogen Specific Detector (XSD), PID/FID	System VOC	Purge-and-trap (P&T) sample concentrator, Air-Tube option	
Air pollution/ industrial hygiene	Chlorinated pesticides and herbicides by GC	NIOSH 9200, various	Electrolytic Conductivity Detector (ELCD), XSD	Pesticide Analysis System		Solvent desorption
Air pollution/ industrial hygiene	Highly-volatile organics in ambient	USEPA TO-1, TO-2	XSD, PID/XSD, PID/FID, PID/ ELCD	System VOC	P&T sample concentrator, Air-Tube option	
Air pollution/ industrial hygiene	Mercaptans by GC	NIOSH	Pulsed Flame Photometric Detector (PFPD)			Solvent desorption
Air pollution/ industrial hygiene	Organic solvents by GC	Various NIOSH	FID, PID/FID, ELCD, PID, XSD			Solvent desorption, thermal desorption
Air pollution/ industrial hygiene	Organophospho-rous pesticides by GC	NIOSH 5600	PFPD			Solvent desorption
Air pollution/ industrial hygiene	Polychlorinated biphenyls (PCB) by GC	NIOSH 5503	XSD, ELCD (alternatives)			Solvent desorption
Air pollution/ industrial hygiene	Polynuclear aromatic hydrocarbons by GC	NIOSH 5515	FID, PID/FID			Solvent desorption
Air pollution/ industrial hygiene	Principal organic hazardous constituents		PID, XSD, PID/ XSD, PID/FID, PID/ELCD		P&T sample concentrator	
Air pollution/ industrial hygiene	Volatile aromatic hydrocarbons		ELCD, PID, XSD, PID/XSD, PID/FID, PID/ ELCD		P&T sample concentrator, Air-Tube option	
Air pollution/ industrial hygiene	VOST analysis	USEPA 5040, 5041			P&T sample concentrator	
Drinking water	Chlorophenoxy herbicides, liquid/liquid extraction, GC with electron capture detector (ECD)	USEPA 515; AOAC 992.32	XSD, ELCD (alternatives to ECD)			
Drinking water	Organochlorine pesticides and PCBs, liquid/ liquid extraction, GC with ECD	USEPA 505, 508	XSD, ELCD (alternatives to ECD)	Pesticide Analysis System		

Application	Technique	Method	Detectors	System	Sample Introduction	Sample Preparation
Drinking water	Volatile halogenated organic compounds, P&T, GC with PID and ELCD	USEPA 502.1	ELCD, PID, XSD (alternative)	System VOC	P&T sample concentrator, P&T water autosampler	
Drinking water	Volatile organics, GC with PID and ELCD	USEPA 502.2	XSD (alternative to ELCD), PID/ ELCD	System VOC	P&T sample concentrator, P&T water autosampler	
Drinking water	Volatile organics, P&T, GC with mass selective detector	USEPA 524.2			P&T sample concentrator, P&T water autosampler	
Metals digestion	Acid digestion of elements from sediments using closed vessel microwave heating	ASTM 5258				Microwave digestion
Metals digestion	Microwave-assisted acid digestion of aqueous samples and extracts	USEPA 3015				Microwave digestion
Metals digestion	Microwave-assisted acid digestion of sediments, soils, and oils	USEPA 3051				Microwave digestion
Metals digestion	Microwave-assisted acid digestion of siliceous and organically-bound matrices	USEPA 3052				Microwave digestion
Petrochemical	COS in propylene	ASTM D5303	PFPD	S-PRO 3200		
Petrochemical	Determination of sulfur compounds in natural gas	ISO 6326	PFPD			
Petrochemical	Determination of sulfur compounds in natural gas by GC	ISO 19739:2004	PFPD			
Petrochemical	Standard test method for analyzing organic contaminants on silicon wafer surfaces by thermal desorption GC	ASTM D1982-99	PFPD			
Petrochemical	Standard test method for comparison of waterborne oils by GC	ASTM D3328	FID, PFPD			

Application	Technique	Method	Detectors	System	Sample Introduction	Sample Preparation
Petrochemical	Standard test method for determination of sulfur compounds in natural gas and gaseous fuels by GC and flame photometric detection (FPD)	ASTM D6228	PFPD			
Petrochemical	Standard test method for determination of trace thiophene in refined benzene by GC	ASTM D4735	PFPD			
Petrochemical	Standard test method for sulfur compounds in light petroleum liquids and sulfur-selective detection	ASTM D5623	PFPD			
Petrochemical	Standard test method for trace carbonyl sulfide in propylene by GC	ASTM D5303	PFPD			
Petrochemical	Sulfur in natural gas and gaseous fuels	ASTM D6228	PFPD			
Petrochemical	Trace sulfur in light petroleum hydrocarbons	ASTM D3120	PFPD			
Petrochemical	Trace sulfur in liquid aromatic	ASTM D3961	PFPD	S-PRO 3200		
Product testing	Organochlorine and organophosphorous pesticide residues by GC	AOAC 985.22	XSD, ELCD, PFPD	Pesticide Analysis System		Gel permeation chromatography (GPC)
Product testing	Organophosphorous pesticide residues	AOAC 974.22	PFPD	Pesticide Analysis System		
Product testing	Organophosphorous pesticide residues	AOAC 968.24	PFPD	Pesticide Analysis System		
Product testing–agricultural products	Synthetic pyrethoids in agricultural products	AOAC 998.01	XSD, ELCD	Pesticide Analysis System		GPC
Product testing–animal fats	Organochlorine pesticide residues in animal fats	AOAC 984.21	XSD, ELCD	Pesticide Analysis System		GPC
Product testing–animal feeding stuffs	Determination of organochlorine pesticide residues by GC	ISO 14181:2000	XSD, ELCD	Pesticide Analysis System		GPC
Product testing–animal feeding stuffs	Determination of organophosphorous pesticide residues by GC	ISO 14182:1999	PFPD	Pesticide Analysis System		GPC

Application	Technique	Method	Detectors	System	Sample Introduction	Sample Preparation
Product testing–animal feeding stuffs	Determination of the content of fatty acids by GC	ISO 17764:2002	FID			
Product testing–fertilizer	Total nitrogen by segmented flow analysis (SFA)	Salicylate	Expanded Range (ER), photometric	Flow Solution IV		Dialysis
Product testing–fertilizer	Total phosphorous by on-line UV/ persulfate digestion	Phosphovanadomolybdate	ER, photometric	Flow Solution IV	Flow injection analysis (FIA) (optional)	UV digestion
Product testing–food	Determination of organochlorine and organophosphorous pesticides in foods	FDA Pesticide Analytical Manual	PFPD, XSD, ELCD	Pesticide Analysis System		GPC
Product testing–food	Organochlorine pesticides and PCB residues in fish	AOAC 983.21	XSD, ELCD	Pesticide Analysis System		GPC
Product testing–milk and milk products	Determination of nitrate and nitrite content using segmented flow analysis	ISO 14673-2:2004	ER, photometric	Flow Solution IV		
Product testing–rice	Determination of amylose in rice extracts by SFA	Iodine	ER, photometric	Flow Solution IV		
Product testing–tobacco	Determination of organochlorine pesticide residues by GC	ISO 4389:2000	XSD, ELCD	Pesticide Analysis System		GPC
Product testing–tobacco	Determination of the content of reducing carbohydrates by continuous flow analysis (CFA)	ISO 15154:2003	ER, photometric			
Product testing–tobacco	Determination of the content of reducing substances by CFA	ISO 15153:2003	ER, photometric	Flow Solution IV		
Product testing–tobacco	Determination of the content of total alkaloids as nicotine by CFA	ISO 15152:2003	ER, photometric	Flow Solution IV		
Product testing–tobacco	Determination of the nitrate content by CFA	ISO 15517:2003	ER, photometric	Flow Solution IV		
Product testing–tobacco	Nicotine by SFA	Cyanogen chloride/ aniline	ER, photometric	Flow Solution IV		
Product testing–tobacco	Total and reducing sugars by SFA	*p*-Hydroxybenzoic acid hydrazide	ER, photometric	Flow Solution IV		
Product testing–tobacco	Volatile base by on-line distillation and SFA	Phenate	ER, photometric	Flow Solution IV		On-line distillation
Product testing–wine	Determination of reducing sugars by SFA	Cupric/neocuproine	ER, photometric	Flow Solution IV		

Application	Technique	Method	Detectors	System	Sample Introduction	Sample Preparation
Product testing–wine	Determination of total acidity by SFA	Bromocresol purple	ER, photometric	Flow Solution IV		
Product testing–wine	Determination of total sulfites by SFA	*p*-Rosaniline	ER, photometric	Flow Solution IV		
Product testing–wine	Determination of volatile acidity by SFA	Iodide/iodate	ER, photometric	Flow Solution IV		
Seawater	Ammonia by SFA	Phenate	LED/ER, photometric	Flow Solution IV		
Seawater	Nitrite nitrogen and nitrate plus nitrite nitrogen by SFA	Cadmium reduction	LED/ER, photometric	Flow Solution IV		
Seawater	Orthophospho-rous by SFA	Molybdenum blue	LED/ER, photometric	Flow Solution IV		
Seawater	Silica by SFA	Molybdenum blue	LED/ER, photometric	Flow Solution IV		
Soil quality	Determination of the content of volatile aromatic hydrocarbons, naphthalene, and volatile halogenated hydrocarbons by P&T with thermal desorption GC	ISO 15009:2002	PID/ELCD, PID/XSD	System VOC, System BTEX	P&T sample concentrator, P&T water autosampler	
Soil quality	Nitrate plus nitrite nitrogen in soil and plant extracts by SFA	Cadmium reduction	ER, photometric	Flow Solution IV		Dialysis
Soil quality	Orthophosphate in soil and plant extracts by SFA	Molybdenum blue	ER, photometric	Flow Solution IV		Dialysis
Soil quality	Soil and plant ammonia by SFA	Phenate	ER, photometric	Flow Solution IV		Dialysis
Soil quality	Total Kjeldahl nitrogen (TKN) in soil and plant digests by SFA	Salicylate	ER, photometric	Flow Solution IV		Dialysis
Soil quality	Total phosphorous in soil and plant digests by SFA	Molybdenum blue	ER, photometric	Flow Solution IV		Dialysis
Solid and hazardous waste	BTEX/MTBE by P&T, GC	USEPA 8021b	PID, PID/FID	System BTEX	P&T sample concentrator, P&T water autosampler	
Solid and hazardous waste	Gasoline range and diesel range organics by GC	USEPA 8015 modified	PID/FID	System BTEX	P&T sample concentrator, P&T water autosampler	
Solid and hazardous waste	Halogenated volatile organics by GC	USEPA 8010	ELCD, XSD	System VOC	P&T sample concentrator, P&T water autosampler	

Application	Technique	Method	Detectors	System	Sample Introduction	Sample Preparation
Solid and hazardous waste	Organochlorine pesticides and PCBs by GC	USEPA 8081a	XSD, ELCD (alternatives to ECD)	Pesticide Analysis System		GPC by USEPA 3640A
Solid and hazardous waste	Organophospho-rous pesticides by GC with FPD	USEPA 8141a	PFPD	Pesticide Analysis System		GPC by USEPA 3640A
Solid and hazardous waste	Semivolatile organics by GC/ mass spectrometry (MS)	USEPA 8270				GPC by USEPA 3640A
Solid and hazardous waste	Total petroleum hydrocarbons by GC	Various state methods	FID, PID/FID			
Solid and hazardous waste	Volatile organics by GC/MS	USEPA 8260			P&T sample concentrator, P&T water autosampler	
Solid and hazardous waste	Volatile organics by P&T, GC	USEPA 8021b	PID/FID, PID/ ELCD	System VOC, System BTEX	P&T sample concentrator, P&T water autosampler	
Wastewater and industrial effluents	Chlorinated acid herbicides by GC	USEPA 615; Standard Methods 6640 B	HECD, XSD (alternatives to ECD)	Pesticide Analysis System		GPC
Wastewater and industrial effluents	Chlorinated hydrocarbons by GC	USEPA 612	XSD, ELCD (alternatives to ECD)			GPC
Wastewater and industrial effluents	Differentiation of diesel and crude oil by GC	USEPA 1663	FID, PID/FID			
Wastewater and industrial effluents	Haloethers by GC	USEPA 611; Standard Methods 6251	XSD, ELCD (alternatives to ECD)			
Wastewater and industrial effluents	Organochlorine pesticides and PCBs by GC	USEPA 608; Standard Methods 6630 B&C; ASTM D3086, D5812	XSD, ELCD	Pesticide Analysis System		GPC
Wastewater and industrial effluents	Organohalide pesticides and PCBs by GC	USEPA 617	XSD, ELCD	Pesticide Analysis System		GPC
Wastewater and industrial effluents	Organohalide pesticides and PCBs by GC	USEPA 1656	XSD, ELCD	Pesticide Analysis System		GPC
Wastewater and industrial effluents	Organophospho-rous pesticides by GC with FPD	USEPA 614, 614.1	PFPD	Pesticide Analysis System		GPC
Wastewater and industrial effluents	Organophospho-rous pesticides by GC with FPD	USEPA 617	PFPD	Pesticide Analysis System		GPC
Wastewater and industrial effluents	Organophospho-rous pesticides by GC with FPD	USEPA 1657	PFPD	Pesticide Analysis System		GPC
Wastewater and industrial effluents	Phenoxy acid herbicides by GC	USEPA 1658	XSD, ELCD (alternatives to ECD)	Pesticide Analysis System		GPC
Wastewater and industrial effluents	Purgeable aromatics by GC and PID	USEPA 602; Standard Methods 6200 C	PID, PID/FID	System VOC, System BTEX	P&T sample concentrator, P&T water autosampler	

Application	Technique	Method	Detectors	System	Sample Introduction	Sample Preparation
Wastewater and industrial effluents	Purgeable halocarbons by P&T, GC with PID and ELCD	USEPA 601; Standard Methods 6200 C	ELCD, PID, PID/ELCD, XSD (alternative)	System VOC	P&T sample concentrator, P&T water autosampler	
Wastewater and industrial effluents	Purgeable organics by GC/MS	USEPA 624; ASTM D5790; Standard Methods 6232 C			P&T sample concentrator, P&T water autosampler	
Wastewater and industrial effluents	Semivolatile organics by GC/MS					GPC
Wastewater and industrial effluents	Volatile pesticides by GC	USEPA 618	XSD, ELCD (alternatives to ECD)			
Water quality	Ammonia nitrogen in water by the automated phenate method using SFA or FIA	USEPA 350.1	ER, photometric	Flow Solution IV	FIA (optional)	
Water quality	Anionic surfactants as MBAS by CFA	Standard Methods 5540C modified	ER, photometric	Flow Solution IV		
Water quality	Boron by SFA	Azomethine-H	ER, photometric	Flow Solution IV		
Water quality	Bromide by SFA or FIA	Fluorescein and chloramine-T	ER, photometric	Flow Solution IV	FIA (optional)	
Water quality	Chloride by SFA or FIA	USEPA 325.2	ER, photometric	Flow Solution IV	FIA (optional)	
Water quality	Color by SFA or FIA	Standard Methods 2020B modified	ER, photometric	Flow Solution IV	FIA (optional)	
Water quality	Colorimetric determination of postdistillation cyanide	USEPA 335.3	ER, photometric	Flow Solution IV		
Water quality	Colorimetric determination of total cyanide by on-line UV digestion and distillation	USEPA 335.3	ER, photometric	Flow Solution IV		UV digestion, on-line distillation
Water quality	Determination of ammonia, part 2, automated spectrometric method	ISO 7150-2:1986	ER, photometric	Flow Solution IV	FIA (optional)	
Water quality	Determination of chloride by CFA and FIA	ISO 15682:2000	ER, photometric	Flow Solution IV	FIA (optional)	
Water quality	Determination of chromium(VI), spectrometric method using 1,5-diphenylcar-bazide	ISO 11083:1994 modified	ER, photometric	Flow Solution IV		

Application	Technique	Method	Detectors	System	Sample Introduction	Sample Preparation
Water quality	Determination of dissolved sulfide, photometric method using molybdenum blue	ISO 10530:1992	ER, photometric	Flow Solution IV	FIA	
Water quality	Determination of free and total cyanide by CFA	ISO 14403:2002	ER, photometric	Flow Solution IV		
Water quality	Determination of nitrite nitrogen and nitrate nitrogen and the sum of both by SFA and FIA	ISO 13395:1996	ER, photometric	Flow Solution IV	FIA (optional)	
Water quality	Determination of orthophosphate and total phosphorous content by FIA and SFA	ISO 15681:2003	ER, photometric	Flow Solution IV	FIA (optional)	
Water quality	Determination of phenol index by CFA and FIA	ISO 14402:1999	ER, photometric	Flow Solution IV	FIA (optional)	
Water quality	Determination of soluble silicates by CFA and FIA	ISO 16264:2002	ER, photometric	Flow Solution IV	FIA (optional)	
Water quality	Determination of surfactants, part 1, determination of anionic surfactants by measurement of the methylene blue index (MBAS)	ISO 7875-1:1976 modified	ER, photometric	Flow Solution IV		
Water quality	Hardness by FIA	USEPA 130.1	ER, photometric	Flow Solution IV	FIA	
Water quality	Hexavalent chromium by SFA or FIA	Standard Methods 3500 Cr modified	ER, photometric	Flow Solution IV	FIA (optional)	
Water quality	Nitrite nitrogen, and nitrate plus nitrite nitrogen by SFA or FIA	USEPA 353.2	ER, photometric	Flow Solution IV	FIA (optional)	
Water quality	On-line total organic carbon (TOC) monitoring	ASTM 5173-97	Infrared	Model 1010 Analyzer		
Water quality	Organochlorine pesticide residues in water	AOAC 990.96	XSD, ELCD	Pesticide Analysis System		GPC
Water quality	Orthophospho-rous by SFA or FIA	USEPA 365.1	ER, photometric	Flow Solution IV	FIA (optional)	
Water quality	Oxidizable substance test substitute	USP oxidizable substance test	Infrared	Model 1010 Analyzer		
Water quality	Phenols by on-line distillation SFA	USEPA 420.2	ER, photometric	Flow Solution IV	On-line distillation	

Application	Technique	Method	Detectors	System	Sample Introduction	Sample Preparation
Water quality	Phenols by SFA or FIA (postdistillation)	USEPA 420.2	ER, photometric	Flow Solution IV	FIA (optional)	
Water quality	Silica by SFA	USEPA 370.1 modified	ER, photometric	Flow Solution IV		
Water quality	Sulfate by SFA or FIA	USEPA 375.2	ER, photometric	Flow Solution IV	FIA (optional)	
Water quality	Sulfide by CFA	USEPA 376.2 modified	ER, photometric	Flow Solution IV	FIA	
Water quality	TKN by gas diffusion and FIA	pH indicator	ER, photometric	Flow Solution IV		
Water quality	TKN by the automated salicylate method (SFA or FIA)	USEPA 351.2	ER, photometric	Flow Solution IV	FIA (optional)	Block digestor
Water quality	TOC	USP 643	Infrared	Model 1010 Analyzer		
Water quality	TOC by combustion oxidation	Standard Methods 5301B	Infrared	Model 1020A Analyzer		
Water quality	TOC by persulfate-ultraviolet or heated-persulfate oxidation method	Standard Methods 5301C	Infrared	Model 1010 Analyzer		
Water quality	TOC by wet chemical oxidation	USEPA 415.1	Infrared	Model 1010 Analyzer, Model 1020A Analyzer		
Water quality	TOC in groundwater	USEPA 9060	Infrared	Model 1010 Analyzer, Model 1020A Analyzer		
Water quality	TOC in high-purity water	ASTM D4779-93	Infrared	Model 1010 Analyzer		
Water quality	TOC in water	ASTM D4839-94	Infrared	Model 1010 Analyzer, Model 1020A Analyzer		
Water quality	TOC, DOC, and SUVA	USEPA 415.3	Infrared	Model 1010 Analyzer, Model 1020A Analyzer		
Water quality	Total carbon (TC) and TOC in water	ASTM D2579-93	Infrared	Model 1010 Analyzer		

Application	Technique	Method	Detectors	System	Sample Introduction	Sample Preparation
Water quality	Total cyanide by UV digestion and FIA	OIA-1678	Amphometric	CNSolu-tion 3000	FIA	UV digestion
Water quality	Total iron by SFA	FerroZine®	ER, photometric	Flow Solution IV		
Water quality	Total phosphorous by SFA or FIA	USEPA 365.1	ER, photometric	Flow Solution IV	FIA (optional)	
Water quality	Weak acid dissociable (WAD) cyanide by FIA	USEPA OIA-1677	Amphometric	CNSolu-tion 3000	FIA	

This information is intended only as a reference for this catalog and is not intended to define method requirements. Complete method information is available in the *Annual Book of ASTM Standards, Federal Register, Standard Methods for the Examination of Water and Wastewater*, and *USP XXV.*

Download the latest product and applications information at www.oico.com.

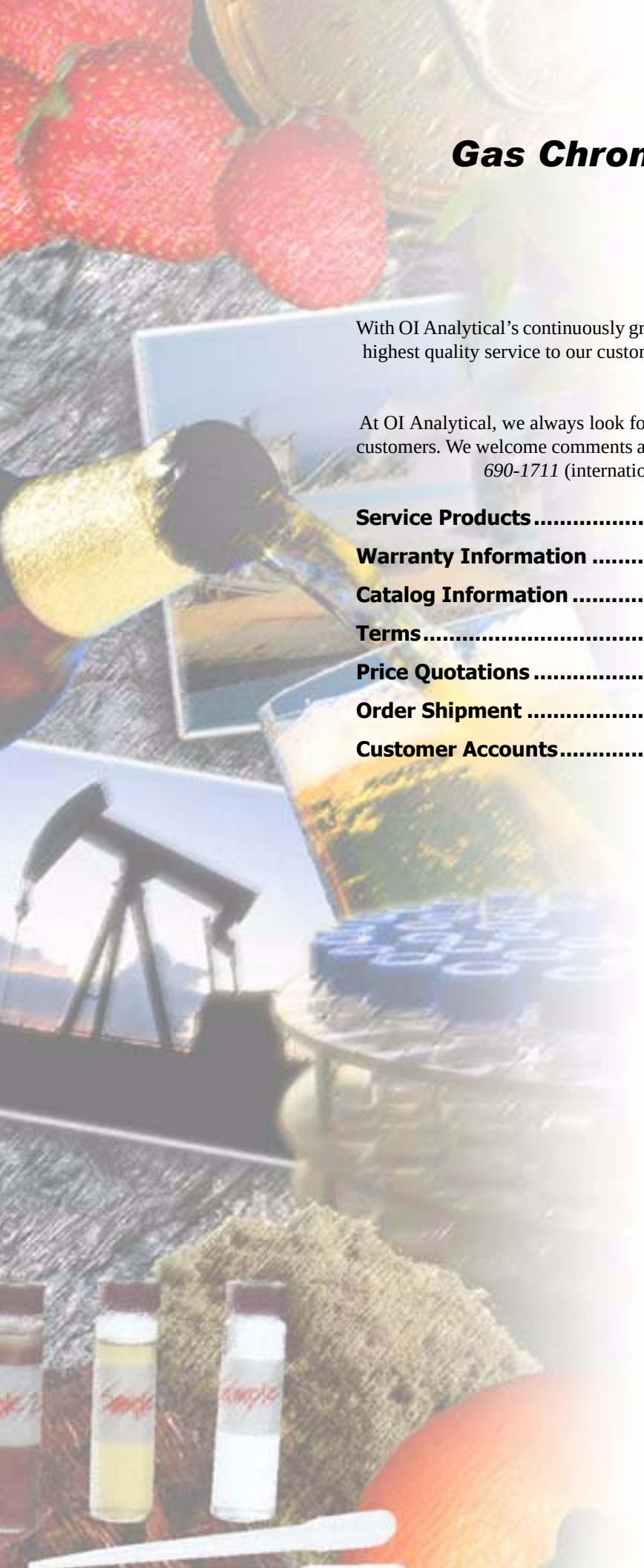

Gas Chromatography Service and Support

Our Customers Come First.

With OI Analytical's continuously growing network of support services, we strive to provide the highest quality service to our customers. Our goal is to provide the best instruments available, backed by a commitment to quality, service, and support.

At OI Analytical, we always look for ways to improve the service and value we provide to our customers. We welcome comments and suggestions. Please call *(800) 336-1911 (USA)* or *(979) 690-1711* (international locations) and ask for the Technical Support Manager.

Service Products **144**

Warranty Information **145**

Catalog Information **146**

Terms **147**

Price Quotations **147**

Order Shipment **147**

Customer Accounts **147**

Service Products

Domestic Toll-Free Technical Support Hotline

OI Analytical's qualified, knowledgeable staff offers personalized, in-depth technical support. Toll-free technical assistance is available at (800)-336-1911. For best service, please use our 800 number for technical support only. Support specialists are available from 7:30 a.m. to 5:30 p.m. central standard time (CST), Monday–Friday (excluding holidays). The hotline is available to take messages 24 hours a day, seven days a week. When calling from international locations, please call (979) 690-1711.

Installation

Our highly-trained, factory-certified service representatives expertly install your instrument, verify operation to factory specifications, as well as provide basic operation and maintenance familiarization. Installation may be purchased for all of our products and is included with our GC systems delivered in the USA For international installations, please contact the International Sales Department.

Upgrade Products

Call (800) 336-1911 for more information on upgrading existing OI Analytical equipment.

Onsite Repair

We provide onsite service at your laboratory for equipment maintenance and repair. We have a nationwide network of experienced, factory-trained technicians for quick, efficient response. Expedited emergency response is also available. Please call (800) 336-1911.

Return to Factory for Repair

We offer in-house repair at our Service Repair Center for equipment maintenance and repair. Please call (800) 336-1911 to arrange to ship your equipment to the factory for repair.

International repairs: All return-to-factory repairs must be coordinated through the Customer Service Department and an authorization number must be assigned prior to shipping. Send shipments to OI Analytical in the following manner: door to door with all customs clearances, duty free, and delivery charges prepaid. Please request broker information to expedite customs clearances.

Short-Term Rental Equipment

We provide short-term rental equipment for a nominal fee to minimize downtime while your unit is being repaired. Rental instruments can be shipped overnight and may be used for up to 28 days (subject to availability). Request our rental agreement for details.

Renting and Leasing Programs

OI Analytical offers a numerous ways to help you get the equipment you need for as long as you need it. If a capital equipment purchase is not in your plans, you can lease or rent any product we carry. Renting is an ideal solution for short-term projects, or choose our rent-to-own or lease plans if you want to keep your option to buy. Call (800) 653-1711 for details.

24-Hour Parts Delivery

OI Analytical can ship on the same day orders received before 3:30 p.m. CST for most routine parts and expendables. Call our Order Entry Department at (800) 673-3750 to order.

Extended Warranties and Service Contracts

To keep your instruments running at peak performance and to minimize downtime, we offer a wide range of extended warranties and service contracts designed to meet your specific needs. Request our maintenance agreement for details.

Computerized Tracking System

Some services are automatic and free of charge like our customer tracking system. We keep your company and equipment information on file to help when you call for any reason: parts, repairs, or troubleshooting.

Applications Support

We provide technical support for customers interested in specialized applications. Customers may purchase specific applications training onsite by one of OI Analytical's support chemists. Request our applications package for details. Free application and technical notes are available. Call (800) 653-1711 for information.

System Support and Training

All instruments receive performance verification upon installation. Training available as a purchase option includes information on instrument familiarization and operation, maintenance, and minor repairs. OI Analytical includes an operator's manual with all instrument shipments. Call for information on additional training.

Hands-On Seminars

Attend hands-on seminars at our headquarters in College Station, Texas. These seminars cover operation, maintenance, troubleshooting, and repair of OI Analytical equipment. We keep class sizes small for personalized attention and customers highly rate our seminars. Call for more information and a registration form.

Warranty Information

Warranties

OI Analytical warrants each instrument and its optional accessories against defects in materials and workmanship under normal use and service. Warranty periods vary by product. See quotations and product literature for time periods. Equipment installed by OI Analytical is warranted from the installation date. All other equipment is warranted from the ship date. If the purchaser schedules or delays installation for more than 90 calendar days after delivery, the warranty period starts on the 91st day from the ship date. This warranty extends only to the original purchaser. OI Analytical will, at its option, repair or replace equipment that proves to be defective during the warranty period, if the equipment is returned to OI Analytical at the purchaser's expense. Parts, labor, and return shipment to the customer shall be at OI Analytical's expense.

Software and firmware designed by OI Analytical for use with a CPU will execute its programming instructions when properly installed on that CPU. OI Analytical does not warrant that the operation of the CPU, software, or firmware will be uninterrupted or error-free.

Consumables, columns, lamps, and high-temperature furnaces are warranted for 30 calendar days (parts only) and are not available for coverage under extended warranties or service contracts.

This warranty shall not apply to defects originating from:

- Improper maintenance or operation by purchaser.
- Purchaser-supplied accessories or consumables.
- Modification or misuse by purchaser.
- Operation outside of the environmental and electrical product specifications.
- Improper or inadequate site preparation.
- Purchaser-induced contamination or leaks.

The foregoing warranty is in lieu of all other warranties, expressed or implied, including, but not limited to, any warranty of merchantability, fitness, or adequacy for any particular purpose or use. OI Analytical shall not be liable for any special, incidental, or consequential damages, whether in contract, tort, or otherwise.

Damages or Loss in Shipment

Inspect all shipments for damage before signing the carrier's bill of lading. If damage is found after unpacking the shipment, immediately contact the carrier to return and inspect the damage. Freight carriers are liable for damages only when the damage is promptly reported and a claim is filed with the carrier. Retain all packaging for carrier inspection. Call OI Analytical within five calendar days of shipment receipt if returning any portion of the purchase. The customer may be subject to a restocking charge if OI Analytical is not notified of damages within the allotted five days. (UPS and Federal Express are liable for damages up to $100 and freight up to $50.)

For international shipments: If damage is obvious upon receipt, refuse to accept the order. If damage is found after unpacking, immediately contact OI Analytical and keep all packing materials. Do not send the shipment back to OI Analytical until directed to do so. A return material authorization (RMA) number must be issued by OI Analytical before sending any equipment back.

Returns

If defective material is found after a shipment inspection, contact the Customer Service Department for correction and to obtain a return material authorization (RMA) number. For parts, OI Analytical must be notified within 60 calendar days of the purchase date. Mark the RMA clearly on the return packaging. For all returned items not defective or damaged by shipping, contact the Order Entry Department at (800) 673-3750 or (979) 690-1711. A 25% restocking charge will apply.

Catalog Information

Methods and Applications

The method and application information contained herein is intended only as a reference for this catalog and is not intended to define method requirements. Complete method information is available in the *Annual Book of ASTM Standards*, *Federal Register*, *Standard Methods*, and *USP XXII*.

Electrical

OI Analytical instruments are designed to use 100/110 (±10%) volts alternating current (VAC) or 220 (±10%) VAC. In the catalog text, all voltages are listed as 100 V, 110 V, or 220 V and ±10% applies. If the voltage is not stated, the product is 110 (±10%) VAC.

Power cords are available for both voltage options and for various countries. See "Power Cords" in the Gas Chromatography Analytical Systems Replacement Parts and Supplies for a list of these cables.

OI Analytical's Standards Policy

Certification of standards sold by OI Analytical, unless specifically stated, is not implied. Standards for which no certification is stated are prepared in the production laboratory using standard laboratory techniques.

Discontinued Products

Several OI Analytical products, including the Models 4420 ELCD, 4440 PID/ELCD, 4460A Sample Concentrator, 5220 ELCD, 5222 ELCD, 5232 PID, 5240 PID/ELCD, 5320 PID, MPM-16 Autosampler, Autoprep 500, CNLab, SP-1000, AS-2000, Models 7165 and 7195 Microwaves, and the Models 1020 and 700 TOC Analyzers are no longer available for purchase. OI Analytical will support these and other products with replacement parts and supplies for at least five years from the last date of production.

Catalog

The information in this catalog and related documents supersedes all previous information and may be revised without notice. OI Analytical reserves the right to correct errors and to change prices or specifications without notice. OI Analytical shall not be liable for errors contained herein, nor for incidental or consequential damages in connection with the furnishing, performance, or use of this material. No part of this document may be reproduced or photocopied, or translated to another language, without the prior written consent of OI Analytical.

Terms

USA and Canada

- Terms are net 30 days from the invoice date, subject to credit approval.
- Minimum order is $50.
- Purchase order number(s) or credit card number is required. (A hard copy of the order may be required before shipment.)
- Mail orders can include credit cards (Visa, MasterCard, American Express), checks or money orders (payable to O.I. Corporation) instead of purchase orders if credit has not been established.

Outside the USA and Canada

Contact the International Sales Department at (979) 690-1711 for more information.

Price Quotations

Price quotations are valid for 30 calendar days after the quotation. International price quotations are valid for 60 calendar days.

Order Shipment

OI Analytical ships orders by the best available method. Standard shipping and handling charges are added to each order based on weight and handling costs. Orders are shipped FOB shipping point (insurance is available upon request for an additional charge). Hazardous chemicals will be shipped at an extra charge.

Note: Hazardous chemicals can be shipped to some international locations. Contact the International Sales Department for more information.

For international orders: All international orders require a 24-hour notice before shipping. If customers want a special freight forwarding company, please supply us with company name, telephone number, contact, and account number.

Customer Accounts

New customers can establish a customer account. Please use this account number on subsequent calls to avoid credit or processing delays. Companies with multiple sites should have multiple customer account numbers.

Trademarks

CNSolution, Cryo-Focusing Module (CFM), Cyclone Water Management, Expanded Range (ER), Foam Buster, Infra-Sparge, MicroTrap, Mud-Dawg, Optima, pH Express, PT Express, Rapid Swap, Sparge Overfill Sensor (SOS), Window Sweep, WinFLOW, WinPulse, WinSEP, WinTOC, WinTrap *Plus*, WinWave, and XSD are trademarks; and ALPKEM, CHROM-LINK, CHROM-NET, and MINICAMS are registered trademarks of O.I. Corporation dba OI Analytical.

Ambersorb is a registered trademark of Rohm and Haas Company.
Brij is a registered trademark of ICI Americas.
BTEXTRAP, Carbosieve, Carboxen, and VOCARB are trademarks of Sigma-Aldrich Company.
Cheminert and Valco are registered trademarks of Valco Corporation.
ChemStation is a trademark of Agilent Technologies.
DOWFAX is a registered trademark of Dow Chemical.
Envirobeads is a registered trademark of Bio-Rad Laboratories.
EnviroSep is a trademark of Phenomenix, Inc.
FerroZine is a registered trademakr of Hach Chemical Corporation.
GasPro is a registered trademark of J&W Scientific, Inc.
Gore-Tex is a registered trademark of W.L. Gore & Associates, Inc.
KEL-F is a registered trademark of 3M Company, Chemical Div.
Kalrez, Teflon, Tefzel, Vespel, and Viton are registered trademarks of E.I. DuPont de Nemours, Inc.
Kleenflow is a trademark of Ricca Chemical.
Kynar is a registered trademark of Atochem North America, Inc.
Luer-Lok is a registered trademark of Becton-Dickinson Corporation.
Norprene and Tygon are registered trademarks of Norton Corporation.
Nupro is a registered trademark of Nupro Corporation.
PEEK is a registered trademark of Victrex PLC.
Pentium is a registered trademark of Intel Corporation.
Perkin Elmer is a registered trademark of Perkin Elmer Corporation.
Pyrex is a registered trademark of Corning Corporation.
RapidVap is a registered trademark of Labconco Corporation.
Rheodyne is a registered trademark of Rheodyne, L.P.
Rtx, Silcosteel, Stabilwax, and Sulfinert are registered trademarks of Restek Corporation.
Snoop is a registered trademark of Nupro Company.
SoilVial is a trademark of Dynatech Precision Sampling, Inc.
Swagelok is a registered trademark of Crawford Fittings Company.
Tenax is a registered trademark of Enka Research Institute Arnhem.
TurboVap is a registered trademark of Zymark Corporation.
Windows is a registered trademark of Microsoft Corporation.

Index

Numerics

03-101662-00 80
03-500007-00 81
03-500223-00 80
03-502955-00 79, 81
03-502959-00 81
03-502968-00 81, 82
03-503055-00 79
03-503906-00 79
03-504024-00 81
03-504099-00 81, 95
03-504104-00 81
03-504156-00 78
03-505223-00 15
03-505269-00 80
03-505273-00 80, 84
03-505362-00 80
03-505363-00 80
03-505372-00 80
03-505384-00 80
03-505389-00 80
03-505393-00 80
03-505419-90 15
03-505429-00 80, 84
03-505439-00 81
03-505441-00 81
03-505450-00 81
03-505451-00 81, 83
03-505463-00 79, 83
03-505477-00 80, 84
03-505478-00 79
03-505484-00 79, 83
03-505495-00 81
03-505514-00 79
03-505596-00 80
03-505598-00 79, 81, 83
03-505604-00 79, 83
03-505629-00 15
03-505633-00 94
03-505720-00 81, 84
03-505726-00 79
03-505739-00 79, 82
03-505741-90 79
03-505743-00 79
03-505745-00 79
03-505791-00 81
03-505816-00 79
03-505830-0 83
03-505830-00 81
03-505831-00 81, 84
03-505844-00 80
03-505868-00 15, 78, 94
03-505869-00 15, 78, 94
03-505872-00 15, 78
03-505873-00 15, 78, 94
03-505874-00 15, 78, 94
03-505875-00 15, 78, 94
03-505876-00 15, 78, 94
03-505878-00 80
03-505879-00 79, 83
03-505880-00 80
03-505881-00 80
03-505883-00 80, 83
03-505884-00 80
03-505895-00 80
03-505896-00 80, 83
03-505899-01 81, 84
03-505899-02 81, 84
03-505899-03 81
03-630068-00 81, 95
03-694637-00 79, 83
03-700001-01 79, 80, 82
03-700019-90 79
03-700020-00 79
03-700025-90 79
03-700032-00 81, 82
03-700056-00 83
03-700060-91 81, 82
03-700072-01 80, 82
03-700076-91 79, 82
03-700077-91 79, 82
03-700081-01 79, 82, 83
03-700108-90 81, 84
03-700111-00 81, 84
03-700112-00 81, 84
03-700140-00 79, 83
03-918707-04 78
03-918707-05 84
03-925673-01 94
111427 63, 69, 75, 98, 113, 114, 122
111732 98, 114, 122
111864 122
112441 110
112458 110
115469 119
115493 89
115519 119
116038 62, 71, 74, 89, 98, 110, 121
120-Pitch gear pump rebuild kit, ELCD 104
128108 61
129767 119
131953 65
131961 101, 102, 103, 106, 107, 108, 113, 115
132050 91, 92
134080 113, 115
139065 122
144361 113, 115
145591 104, 122
147901 72, 73, 75, 76, 122

165531 122
165896 75, 76, 102, 103, 104, 105, 122
166208 71
166224 63, 69, 72, 73, 122
166274 71
167545 68, 87, 89, 121
169327 121
169335 121
169468 87
169484 63, 87
169674 88
169682 71, 98, 99
169715 79
169963 111
170093 91, 93, 110
170580 104
170655 104
172461 68, 87, 121
174003 75, 76
175829 61
176033 86
177065 111
177453 71, 119
177502 61, 71
177626 65
177659 68, 87, 121
178277 79
178434 71
178574 101
178954 110
179044 69
179085 104, 122
179325 102, 103
179457 61
179499 71
179812 69, 75, 76
180901 98, 99
180919 98, 99
181180 98, 99
181750 98
181826 98
181867 98, 99
182154 99
182238 71, 73
183319 61
183939 98, 102, 106, 108
184978 122
185116 113
185843 98
185850 98, 113
185868 15, 60, 66, 78, 89, 110
185967 98, 106
186338 99
186678 120
186973 34
187161 61
187179 87
187302 32, 119
187310 23
187344 32, 119
187476 98, 100
187716K 32, 119
187765 118
188003 121
188193 118
188201 118
188409 15, 60, 66, 78
188417 98, 99
188482 98
188490 98, 99
188623 85
188782 99
189423 98
189431 98
191742 113
191759 113, 115
191767 113, 115
191775 113, 115
191783 113, 115
191791 113, 115
191817 113, 115
191825 113, 115
191833 113, 115
191866 113, 115
191916 113, 115
192013 32, 113, 119
192138 30
192229 113, 120
192831 118
193235 113
193318 118
193326 118
193409 63, 104, 122
193524 23
193797 98, 113
193847 118
194720 32, 119
194910 32, 119
195354 30
195461 99
196089 98, 100
196097 98
196105 33, 89, 98, 99, 100, 101, 103, 106, 110
196113 33, 89, 98, 99, 100, 101, 103, 106, 110
196162 98, 100, 113, 115
196170 98, 100, 113, 115
196196 98, 99, 113
196204 85, 86
196220 66, 85, 87, 104
196246 79, 85, 98, 100
196261 88
196287 86, 87

196303 98, 113, 114, 115
196311 85, 87, 98
196352 113, 115
196816 121
197079 110
197194 88, 104, 122
197202 104, 122
197251 86, 87, 88
197319 88
197830 61
197848 121
198432 88
198689 86
198697 86
198739 86
199406 86
199513 61
199521 68, 87, 95
199950 113, 115
202077 61, 72, 110
202580 89
202671 89
202754 90, 122
202846 89
202879 89, 120
203042 67, 86, 87, 96
203059 118
203067 118
203554 89
203596 89
203604 89
203661 89
203802 89
203810 89
203836 89
204024 89
204693 98, 99
204735 101, 104
205708 89
206094 98
206102 98
206110 98, 113, 115
206193 72
206409 89
206557 90
206839 120
206888 89, 118
207761 69
208256 90
208314 89
208330 33, 98, 99, 100, 101, 103, 106, 110
208785 89
209015 68, 95
209031 68, 95
209098 66
209114 67, 96
209254 66, 68
209536 85
209866 60, 66
209874 66
209882 60, 66
210278 113, 115
211441 74, 119
211953 67, 74
213579 104
214577 104, 105
214817 91
214890 100
214924 98, 118
215061 67, 68, 86
215962 32, 100, 110
216010 100
216267 104, 105
216366 85, 89, 91, 92, 93, 100, 101, 102, 103, 106, 107, 108, 109, 110
216416 89
216507 104, 105
216838 89
216952 101
217182 102, 103, 109
217208 101, 102, 103, 109
217240 66, 79, 86, 87, 101
217679 89
217687 89
217695 89
217711NI 61
217760 114
217778 88
217802 61
217828 85
217984 89
218024 89, 91, 92
218081 86
218123 89
218644 106, 110
218651 86
218669 86
218928 69
218982 69
219402 101
219972 63, 69
222794 98, 99
222885 121
222893 121
222901 121
222919 62, 113, 114, 121
223057 71, 72, 74, 75, 98, 102, 103, 106, 107, 108, 110, 112
223164 77
223222 101
223743 101, 102, 103, 109
223776 98, 100, 101, 102, 103, 109

223917 101, 121
223933 102, 103
224337 61, 62, 65, 66, 71, 85, 86
224352 61, 62, 66, 68, 85, 87, 88
224584 66
224600 66
224675 66, 87, 88
224923 101
224972 101
224980 101
225003 104
225037 32, 119
225474 61
225516 67
225557 85
225623 68, 95
225631 68, 95
225656 67
225664 65
226134 90, 122
226175 103
226340 91, 93
226357 101, 102, 103, 104, 109
226365 91, 92, 93, 101, 102, 103
226464 101
226530 60, 66
226548 66, 89
226605 66
226621 66, 110
227157 67
227173 65
227207 71
227223 61, 66
227314 67
227348 63, 69
227363 63, 69
227371 67, 96
227389 68, 69, 70
227397 68
227439 69, 70
227447 69, 70
227462 101, 102, 103, 109
227470 103
227488 103
227496 102, 103
227603 69
227611 69, 70
227637 69, 70
227645 69, 70
227652 68, 69, 70
227959 67, 120
227975 62, 67, 121
228015 60
228049 71, 72, 74, 75, 85, 86
228056 62
228098 67
228114 63, 69
228122 63, 69
228510 67
228536 67
228957 69, 70
228981 61
229195 11
229401 89
229526 91, 92, 93
229583 91, 92, 93
229633 32, 100, 110
229641 32, 100, 110
229658 100
229666 91, 92, 93
230052 67
230060 67
230524 104
230565 101
230938 65
230953 104
231167 121
231365 100
232173 102, 103
232207 87, 95
232223 87, 95
232348 86, 87, 96
232371 32, 119
232801 71, 74, 95
233346 91
233353 91, 92, 93
233700 67
233718 67
233999 69, 70
234021 102, 103, 109
234112 67
234187 102, 103
234237 101
234336 23
234393 66
234401 104, 105, 122
234815 71, 74
234914 75, 76
235515 71, 74
235762 76
235879 75, 76
235895 74, 120
235911 74, 76
236240 118
236414 91, 120
236505 33, 91, 92, 93, 100, 103
236646 91, 92, 93
237180 69
238790 72
240929 91, 92, 93
242062 100
242479 67

242503 67
242529 67
242552 67
242586 91, 93
244483 15, 60, 66, 78
244814 110
245415 106, 107, 108
245464 111
245506 100, 106, 107, 108
245563C 111, 112
245621 106, 108, 109
245712 101
245779 106
245886 106, 107
245894 111
246066 33
246074 27, 106, 107, 108
246132 106
246140 106, 120
246371 32, 100
246389 32, 100
246397 32, 100
246405 32, 100
246728 113, 115
246736 113, 115
246744 113, 115
246751 113, 115
246900 111, 112
247007 100
247700 69, 70
247783 86
247882 66
247916 87, 95
247924 86, 87
247932 87, 95
248047 71, 72, 74, 75
248062 66
248187 88
248393 86, 120
248575 69
248757 71, 72, 74, 75
248765 72, 75
248864 63
248915 71, 74
248963 88
248971 88
249177 61, 67, 119
249185 68, 70
249268 121
249276 121
249284 121
249300 121
249318 121
249466 68
249490 68
249508 68
249524 69
249987 86
250084 61
250092 61
250662 26
251694 15
251744 106, 108
251751 106, 107, 108
252049 86, 87
252213 15, 60, 66, 78
252221 102, 103
252296 102
252320 120
252379 98, 99, 113
252429 91, 92, 106, 110
252510 99
252544 98, 99
252551 32, 98, 110, 113
252569 32, 98, 100, 106, 110
252585 91, 111
252874 66
253054 122
253070 34
253088 34
253518 71, 74
253559 74
254714 67, 68
254870 67
254920 75
255679 98, 99
255778 101
255786 33, 91, 92, 93, 100, 101, 103
255794 33, 91, 92, 93, 100, 103
256529 75, 76
256610 71, 72, 74, 75
256628 71, 72, 74, 75
256966 74, 75
257147 74
257246 75
257329 67, 74, 119
257386 75, 76
257394 75, 76
257402 75, 76
257410 75, 76
257428 71
257436 74
257451 71, 74
257469 72, 73, 75
257477 75, 76
257527 74
257550 72, 73, 75
257675 75
258368 121
258418 119
258483 86, 87
258749 30

258830 63, 69
258848 63, 69
258897 121
259416 101
259432 34
259507 12, 71, 73, 74
259945 118
259986 118
260174 88
260182 88
260190 88
260208 88
260216 88
260224 88
260307 88
260323 102, 103, 109
260414 74
261313 71
261339 71
261909 12, 15, 78
263442 71, 73
263673 74
263756 71, 74
263764 71, 74
263772 74, 76
263897 106, 107, 108
264184 34
264234 106
265744 106, 107, 108
265769 106, 107, 108
265819 106, 108
265827 106
266833 101
270173 71, 73
270199 71, 72, 74
271155 106, 108
271809 87
272369 101, 102
27-239992-00 78
272443 66, 79, 100, 101, 102, 103, 109
272542 104, 105, 122
273615 106, 107
274266 101
274654 23
274662 23
274738 24
274746 24
274811 28
274829 28
274837 30
274845 30
274852 32, 100, 110
274860 32, 119
274878 32, 119
274886 32, 101, 119
274894 26
274910 24
274928 24
274936 28
274944 28
274969 101, 120
274985 106, 107, 108
275065 29
275073 29
275974 33, 110, 119
276568 14
276576 14
276584 15
276592 15, 78, 94
276709 15, 78
276717 15, 78
276725 15, 78
276733 15, 78
276766 23
277319 72
278101 71
278671 79
278846 101, 120
278861 106
279125 71
279703 113, 115
279828 33
279869 33
279885 33, 102
280453C 111, 112
280461C 111, 112
280552 91, 92
280560 91, 92
280578 11
280586 91, 120
280602 109
280636 29
280644 29
280719 111
280727 111
280735 106, 111
282251 71, 73, 77
282293 77
282335 77
282350 77
282475 110
282483 110
282491 110
282509 110
282608C 111
282624 110, 112
282707 71, 73
282749 12
282756 71, 73
282848 72, 73
282855 72, 73
282863 72, 73

282905 111
282913C 111, 112
282921 111
282939C 111, 112
282947 111
283051 111
283093C 111, 112
283101 111, 120
283127 20
283150 114, 115
283168 106, 107, 114, 115
283176 113, 115
283192 114, 115
283200 114
283218 113, 115
283226 114
283242 114, 120
283267 113, 115
283283 114, 115
283341 31
283549 69
283887 73
284364 111
284414 111
284521 114
284539 111
284612 31
284620 113, 115
284638 114, 115
284646 113, 115
284729 71
284828 71
284844 71
284935 15, 60, 78, 94
284943 42
284950 42
284976 120
285007 120
285015 11, 33, 119
285031 11
285049 33, 119
285072 20
285080 20
285098 20
285122 25
285130 40
285189 71
285809 26, 29
285908 113
285916 111
285924 60, 66
286096 111, 112
286278 20
286302 111
286344 110
286393 111, 112
286419 77
286427 77
287649 69
287656 20
288050 111, 112
288068 111, 112
288076 111, 112
288084 111, 112
288902 110
288977 110
289546 63, 69
289603 21
289611 21
290007 111
290015 111
290049 111
290106 111
290320 81
290411 111
290429 111
290452 111
290460 111
290627 106
290635 27, 106
290643 26
291278 24
291310 24
291435 69
291443 69
291625 8
291906 26
292946 40
292953 40
292961 41
292979 41
292987 41
292995 42
293001 46
293043 15, 78, 94
293126 14
293134 14
293605 71, 73
294025 71, 72, 75
294231 25
294249 25
294256 25
294660 77
295279C 111
295287C 111, 112
295295C 111, 112
295543 72
295998 77
296053 71, 74, 81, 95
296061 71, 74, 81
296079 71, 74
296160 71

296384 21
296392 21
296400 21
296418 21
297234 89
297259 89
297309 89
298851 104
298984 111, 119
299933 110
300368 60, 66
300954 60, 66
300988 46
301036 23
301044 23
301051 24
301069 24
301077 27
301085 28
301093 28
301119 120
301325 111, 112
301333 111, 112
302810 78
302877 34
302885 34
302893 34
302901 34
302919 111
302943 120
305367 34
306290 27
306449 27
306886 60
307108 69, 70
307116 69, 70
307124 69, 70
307132 69, 70
307157 69, 70
307306 101, 120
307322 106, 120
307470 120
307546 69
308837 44
308837EU 44
308882 113, 115
309435 72
309443 72, 73
309591 77
309864 16
310565 71, 120
310623 111
310995 67
311019 120
311209 44
311209EU 44
311738 67
311761 120
312074 77
312090 72, 73, 77
312249 16
312264 16
312330 22, 111
312363 21
312439 16
312561 16
312595 110
312678 110
312686 33, 119
312694 21
313205 86
315010 106, 107
315234 63
315945 71
316828 13
316836 40
316844 40
316851 118
316893 110
317016 74
317453 67
318717 38
318725 38
318733 38
318949 111
319451 118
319452 118
319456 12
319458 118
319501 12
319510 107
319514 27, 106, 107
319520 33
319522 26
319631 106
319638 122
319639 122
319644 38
319757 26
319759 106, 120
319774 106, 107
319809 111
319816 110
319817 110
319821 20
319822 60
320379 20
320383 110
320389 44
320408 34
320409 34
320504 10

320533 10
320534 10
320538 120
320540 10
320580 61
320581 60
320590 60
320594 63
320600 60
320637 61
320652 10
320653 10
320654 10
320666 10
320667 10
320670 60
320704 60
320724 65
320827 109
320828 109
320829 29
320830 77
320831 77
320832 77
320839 118
320840 118
320841 118
320842 118
320940 45
320978 61
320994 61
320995 61
320996 61
321003 61
321004 61
321005 61, 65
321006 61
321010 63
321014 60
321015 61
321025 61
321035 62, 96
321037 62, 63
321046 63
321047 63
321048 63
321079 63
321080 8, 62
321081 8, 62
321083 60
321090 5, 62
321091 5, 62
321097 60
321100 63
321101 63
321103S 61
321125 65
321133 71
321134 65
321145 62
321146 8, 62
321147 8, 62
321148 62
321149 61
321150 61
321164 5
321165 7
321169 61
321170 65
321171 65
321174 63
321175 60
321451 65
321452 65
321454 61
321469 65
321475 62, 65, 96
321476 63
321478 62
321479 8, 62
321484 61, 65
321488 65
321578 63
321579 61
321580 65
321585 62
321586 60
321589 65
321596 61
321599 65
321602 63
321603 62
321604 62, 120
321606 4
321607 4
321608 12, 71
321610 7
321611 7
321612 7
321614 5
321615 8, 62
321616 4
321617 4
321618 5, 62
321619 5, 62
321651 62
321655 72, 73
321669 88
321672 61
321676 7
321678 65
321691 63

321692 8, 63
321693 8, 63
321696 8, 62
321697 8, 62
321698 8
321699 96
321700 62, 65, 96
321702 7
321703 7
321706 7
321707 7
321709 8
321710 12
321711 12
321712 12
321728 15, 62, 94
321736 65
321743 61, 62
321747 5, 62
321748 5, 62
321749 61
321785 71
321901 8, 60
321902 8, 60
321906 63
321918 8
321921 60
321922 60
321932 63
321955 77
322230 8, 62
322231 61, 79
322233 8, 62
322236 110
322237 65
322247 61
322248 61, 65, 79
416-100 44
981-019 45
981-019EU 45

A

A303-0709-00 61
Adapter 106
    Brass, Model 4551A Water Autosampler 71
    Brass/nickel 113
    Stainless steel, gold-plated 88
Adapter, Model 4551A Water Autosampler 71
Agilent 6890 volatiles inlet (Option 142) 11
Air analysis products
    Replacement parts and supplies 88
Air gas flow controller, PFPD 110
Air Regulator, FM-2000 56
Air tube, stainless steel, glass-lined 88
Air-Tube Accessory 7
Air-Tube Desorber
    Accessories 88
    Assembly 88
Air-tube shipping container 88
Allen screw 102, 103, 107, 108
Allen screw set 101, 106, 113
Allen wrench 91, 111, 114
Alumina reaction tube, ELCD 101
Alumina tubing 90
Analog input board (AIB) 32, 101, 119
Analog out signal cable for Agilent 6890 110
Analog signal cable 98, 113
ANM-100 55
Applications 146
    Support 145
Atrazine 121
Automated Multipoint Process Sampler (AMPS) 16
    Operator's manual 120
AUX EPC gas flow module for Agilent 6890 110
AUX-EPC module 33
Auxiliary EPC gas flow module 119
Azobenzene 121

B

Backplane board, CFM 89
Bar code reader 15, 78
Barbed hose adapter 110
Base O-ring, Viton 113
Base to reactor union, Model 5360A XSD 106, 107
Battery
    Model 4551 74
    Model 4560 67
Bayonet to XSD reactor union for Model 5360 106, 108
BHC 121
Bias voltage cable for Shimadzu 17A, FID 113, 115
Blank trap
    Glass 88
    Stainless steel 88
Blank Water Filter Kit, AMPS 16
Block for Foam Buster 65
BNC connector assembly, FID 113, 115
BNC to BNC electrometer cable, FID 113
BNC to BNC signal cable, FID 115
Board
    CFM 89
    Model 5220 101
Bracket base assembly, XSD 106
Bracket, sample valve mounting, Eclipse 63
Brass reverse ferrule 85
BTEX 41, 63, 69
    Column kit 118
    Standard 121
Bulkhead fitting
    Stainless steel, Eclipse 61
    Stainless steel, Model 4551A Water Autosampler 71
Burkert solenoid valve assembly, Model 4552 Water/Soil Autosampler 81

Bushing
PEEK, Cheminert, Model 4551A Water Autosampler 71
Snap 65

C

Cable 66
Analog signal 98
BNC to BNC 74
BNC to BNC, Model 4560 71
Cell to reactor interface 100
CFM 89
CFM injector to ground 89
CFM to injector, Agilent 5890 89
CFM/4560/4552 89
CFM/4560/4552/Agilent GC 89
Detector controller to cell interface 100
Eclipse Sample Concentrator to Model 4552 Water/Soil Autosampler 60
Eclipse to Model 4551A Water Autosampler 71
Electrolytic Conductivity Detector (ELCD) 100
Electrometer 98
Ethernet 60
Ethernet twisted pair 60
External events 98, 100
GC ready invert 89
H, Agilent 6890N/6850 60
Halogen Specific Detector (XSD) 106
Handshake pigtail for Agilent 5890 60, 66
Handshake pigtail for Agilent 5970 60
Handshake pigtail for Agilent 5970 (RTE-A) 66
Handshake pigtail for Agilent 5970/5972MS (Pascal) 60
Handshake pigtail for Agilent 5971 (PASCAL) 66
Handshake pigtail for Agilent 5971 or 5972 (DOS or UNIX) 66
Handshake pigtail for Agilent 6890 66
Handshake pigtail for Agilent 6890A/6890MS 60
Handshake pigtail for Agilent 6890N/6890A/6890MS/6850 60
Handshake pigtail for Shimadzu 17A 60
Handshake pigtail for Thermo Finnigan Trace GC 60
Handshake pigtail for Varian 3400 60
Handshake pigtail for Varian 3400/3600 66
Handshake pigtail for Varian 3800 66
Handshake pigtail for Varian 3800/3900 60
Handshake pigtail to spade lugs 66
Handshake pigtail, Agilent 5890/6890 89
H-remote start for Agilent 6890/6850 66
Interface 78
interface for P&T 60
Lamp high voltage 98
Model 4552 Water/Soil Autosampler to Agilent 5890 15
Model 4552 Water/Soil Autosampler to Agilent 6890 15
Model 4552 Water/Soil Autosampler to Model 4460/4560 to Agilent 15, 78
Model 4552 Water/Soil Autosampler to Model 4460/4560 to Agilent 5890, RTE Agilent 1000 GC/MS software, Agilent 5970 MSD, or Agilent 5988 MS 15, 78
Model 4552 Water/Soil Autosampler to Model 4460/4560 to Varian 3400/3700 15
Model 4552 Water/Soil Autosampler to Shimadzu 17A 15
Model 4552 Water/Soil Autosampler to Tekmar 2000/3000 with Agilent 5890 with 5970/71/72 MSD and Unix-B or MS-DOS, and 5890/5989 MS Engine 15, 78
Model 4552 Water/Soil Autosampler to Tekmar 2000/3000 with Agilent 6890 15
Model 4552 Water/Soil Autosampler to Tekmar LSC-2000/3000 to Agilent 5890 15, 78
Model 4552 Water/Soil Autosampler to Tekmar LSC-2000/3000 to spade lugs 15, 78
Model 4552 Water/Soil Autosampler to Tekmar LSC-2000/3000 to Varian 3400/3700 15, 78
Model 4552 Water/Soil Autosampler to Tekmar LSC-2000/3000 with Agilent 5995/85/87/88/92 15, 78
Model 4552 Water/Soil Autosampler to Varian 3400 15
Model 4560 to any handshake pigtail cable 66
Model 4560 to CFM 66, 89
Model 4560 to DPM-16, MPM-16, or MHC-16 66
MSD interface 66
PFPD 110
PID 98
PT Express to Agilent 6890 remote 10
PT Express to Model 4560 10
PT Express to Model 4560/4552 10
PT Express to universal GC 10
Pulsed Flame Photometric Detector (PFPD) 110
Reactor interface 100
Reactor power 100
Remote start 100
Remote start lamp, PID 98
RS-232-C (WinTrap Plus) 66
Shimadzu 17A GC 66
Signal out 100
Sparge mount/water management heater, Model 4560 67
Tekmar 2000/3000 with Agilent 6890 78
Thermocouple probe, CFM 89
Valve manifold heater, Model 4560 67
Valve/oven heater, Model 4560 67
Varian 3800 signal 34
Vent valve 100
Vent valve, PID 98
Cable clamp, Eclipse 61
Cable selection guide 94
Calibration bar and pin 15
Cap 71
Open hole 74
Carbon molecular sieve trap 63, 69
Glass 88
Stainless steel 88

Carbopack 63, 69
Carbosieve 69
Carboxen 69
Carousel cover
  Model 4551 74
  Model 4551A Water Autosampler 71
Carrier flow controller 70
Carrier gas FC six-port valve tube assembly, Model 4560 69
Carrier gas inlet six-port valve tube assembly, Model 4560 69
Case, Foam-Lined 56
Case, reactor 106
Catalog information 146
Cell amplifier board
  Electrolytic Conductivity Detector (ELCD) 101
  Model 5220 101
Cell assembly, ELCD 101
Cell interface board, Model 5220 101
Cell to reactor interface cable, ELCD 100
Ceramic column cutter, CFM 89
CFM/4560/4552 cable 89
CFM/4560/4552/Agilent GC cable 89
Charcoal 63, 69
Check valve 73
  Eclipse 63
  Model 4551 74
  Model 4551A Water Autosampler 71, 73
  Model 4560 69
ChemStation 40
CHL-100 55
Chlorpyrifos 121
CHR-100 55
CHROM-LINK 49, 55
CHROM-NET 49, 55
Cleaning supplies 118
Clip fitting, Eclipse 61
Coaxial cable connector, FID 113, 115
Coaxial electrometer cable, FID 113, 115
Collector electrode, FID 113, 115
Collector insulator, FID 113, 115
Column
  DB 624 118
  DB VRX 118
  GS-GasPro 118
  pesticide 118
  Rtx-1 118
  Rtx-35 118
  Rtx-5 118
  Rtx-VMS 118
  Stabilwax 118
Column cutter, ceramic 118
Column ferrule 91
Column nut fitting 110
Column positioning tool, PFPD 111
Column splitter 118
Columns and column supplies 118
Combustor extractor tool, PFPD 111
Combustor kit, PFPD 111
Combustor sleeve, PFPD 111, 112
Combustor support washer, aluminum, PFPD 111
Combustor support, PFPD 111, 112
Combustor, PFPD 111, 112
Compression spring, stainless steel 65
Connector assembly cable 98
Connector assembly, PID 99
Controller board, Model 5300 101
Converters 55
Cool-Zone 45
Copper tubing 98, 122
Copper tubing, cleaned 69, 75
Coupling fitting, brass/nickel, DPM-16 86
Coupling, Model 4551A Water Autosampler 71
Cover, carousel
  Model 4551A Water Autosampler 71
COVL-485 55
CPU board
  Model 4560 67
  Model 5220 101
Cross fitting, Silcosteel, Eclipse 61
Cross swivel, brass/nickel, Model 4551A Water Autosampler 71
Cryo-Focusing Module (CFM)
  Boards 89
  Cable 89
  Control module 89
  Ferrule 89
  Fittings 89
  Fuse 119
  Operator's manual 89, 120
  Replacement parts and supplies 89
  Tubing 90
  Valve assembly 89
Cryo-Focusing Module (CFM) to injector cable, Agilent 5890 89
Cryogen supply line, CFM 90
CSS-100 54
Curved spring washer, FID 113, 115
Custom 47

D

Damages or loss in shipment 146
DB 624 column 118
DB VRX column 118
DB-1 tubing, precolumn 122
DC actuator assembly, Eclipse 60
Deactivated fused silica tubing, precolumn 122
Delivery, parts 144
Detector accessories 32
  Varian 34
Detector base, PFPD 111, 112
Detector body, PFPD 111, 112
Detector cap, PFPD 111, 112

Detector controller to cell interface cable, ELCD 100
Detector pallet 102
Detector standard, 100 ppm, FID 113, 114
DFM-100 56
Diagnostic Tools 56
Diazinon 121
Digital flow check meter 56
Dimethyl disulfide permeation tube, PFPD 111
Dimethyl methyl phosphonate permeation tube, PFPD 111
Discontinued products 146
DMP-100 55
Door interlock magnetic cable, Infra-Sparge 65
Door, Model 4560 for Model 4551A Water Autosampler 71
DPM purge to air tube assembly 88
DPM-16 Autosampler
  Gas line connections 85
  Heater jacket kits 86
  Needles 86
  Purge tube connections 86
  Purge tube connections for frit sparging 86
  Purge tube connections for needle sparging 86
  Replacement parts and supplies 85
  Sample valve 87
  Sparge mount assembly 87
  Transfer lines 86
  Tube assemblies 87
  Valves 87
DPM-16/MHC-16 Autosampler
  Operator's manual 86, 120
Drain tube adapter assembly, Model 4560 66
Drain valve (pinch valve) 69
Drain valve assembly, Eclipse 63
Dual channel electrometer 119
Dual channel electrometer and SCE
  Operator's manual 120
Dual remote start Y-cable, PFPD 110
Dual vent valve cable, XSD 106

E

Eclipse 2
Eclipse Sample Concentrator 2, 12, 40, 41, 60
  Assemblies 60
  Cables 60
  Electronics module 62
  Ferrules and fittings 61
  Fuses 61
  Heaters and thermocouples 61
  Model 4552 Water/Soil Autosampler interface kit 15
  Modules 62
  Needle sparge hardware kit 8
  One-year parts and supplies kit 8, 62
  Operator's manual 120
  Operator's manual and software 62
  Pneumatics module 62
  Preventive maintenance kit 8
  Sample pathway preventive maintenance kit 62
  Sample pathway refurbishing kit 62
  Sample pathway refurbishment kit 8
  Sparge Overfill Sensor (SOS) 65
  Spargers and accessories 62
  Starter and support kit 62
  Starter/support kit 8
  Startup kit 62
  Traps 63
  Tube assemblies and tubing 63
  Valves and accessories 63
Electrical 146
Electrolytic Conductivity Detector 24
Electrolytic Conductivity Detector (ELCD)
  Cables 100
  Ferrules 100
  Fittings 101
  Mode kits 101
  Model 5220 ELCD for Agilent operator's manual 101
  Model 5220 ELCD for Varian operator's manual 101
  Model 5320 ELCD 42
  Model 5320 ELCD for Agilent 5890 operator's manual 101, 120
  Model 5320 ELCD for Agilent 6890 operator's manual 101
  Model 5320 ELCD for Varian 3400/3800 operator's manual 120
  Model 5320 ELCD for Varian operator's manual 101
  Model 5320 for Agilent 6890 operator's manual 120
  Reactor assembly 101
  Reactor base assembly for Model 5220 ELCD for Agilent 5890 103
  Reactor base assembly for Model 5320 ELCD for Agilent 5890 103
  Reactor base assembly for Model 5320 ELCD for Agilent 6890 102
  Replacement parts and supplies 100
  Resin cartridges 104
  Scrubber 104
  Solvent assembly for Model 5320 ELCD 105
  Solvent system 104
  Tubing 104
Electrometer 32
  Cable 98, 99
  Card, PID or FID 119
  Connector assembly for Agilent 5890, FID 113
  Dual channel 119
  Single channel 119
Elevator motor assembly, Model 4552 Water/Soil Autosampler 80
EPC PCM flow module 11
ESK-200 56
Ethernet cable 60
Ethernet twisted pair cable 60
Evaporation system 45
Exhaust tube assembly, CFM 89
Extended nut

Female, CFM 89
Female, stainless steel 91
External events cable 98, 100
Agilent 6890 110
Agilent 6890, XSD 106
Extractor, ferrule and septum 121

F

Fan assembly
Eclipse 60
Model 5200 Controller 101
Model 5300 Controller 101
FBA 46
FDD-400 55
Ferrule 66, 68, 85, 98, 110, 115
12 mm, Teflon 77
Back, brass 113
Brass 98, 100, 101
Brass reverse 85
Brass tube 71, 72, 74, 75
Brass tube back 98, 100
Brass tube front 98, 100
Brass tube set 98, 100
CTFE, Cheminert, Foam Buster 65
Detector base 33
Electrolytic Conductivity Detector (ELCD) 100
Flangeless, Model 4552 Water/Soil Autosampler 82, 83
For Eclipse water transfer line, Teflon 79
For Model 4560 water transfer line, Teflon 79
For reservoir vial, Teflon, Model 4552 Water/Soil Autosampler 79
Front, brass 113
Graphite 98, 106, 113
Graphite tube 98
Graphite/Vespel 85, 89, 91, 98, 100, 101, 106, 110
KEL-F 85, 86
PEEK tube ring 75
PFA Cheminert 71
Reverse, brass 86
Reverse, Teflon 66
Set, stainless steel, Swagelok 79
Sparger inlet arm 66
Stainless steel 85, 98, 100, 110
Stainless steel tube 71
Stainless steel, gold-plated 85
Stainless steel, Valco 79
Teflon 66, 85, 86, 87, 88, 100, 101, 104
Teflon tube 71
Tefzel tube 71, 72, 74
Tefzel, flangeless, Foam Buster 65
TFE 61, 62, 65
TFE/glass-filled 61, 62
Vespel 66
w/ Nut, flangeless 79
FID-510 52
Filter assembly, ELCD 104
FIO-100 50
Firmware
EPROM, Model 4560 67
Model 4551 74
Model 4551A Water Autosampler 71
Fitting 71
CFM 89
Eclipse 61
Electrolytic Conductivity Detector (ELCD) 101
Female Luer-Lok 87
Model 4551A Water Autosampler 71
Model 4560 66
PFPD 110
Water management 61
Fitting adapter
Brass/nickel 61
Fitting for water transfer line, Model 4560 79
Fitting nut
Polypropylene 74
Stainless steel, Foam Buster 65
Fitting/ferrule for waste line, Standards Addition Module (SAM) 77
Flame arrestor, PFPD 111, 112
Flame jet, FID 113, 115
Flame-Ionization Detector (FID)
Base 113, 115
Base fitting 113, 115
Base O-ring 113, 115
Body 115
Body casing 113, 115
Electrometer card 119
Interface card 119
Jet 114, 115
Jet ferrule 115
Jet ferrule, Vespel 114
Model 4410 30
Model 4415 30
Replacement parts and supplies 113
Flame-Ionization Detector (FID). See also *Model 4410 Flame-Ionization Detector (FID)* and *Model 4415 Flame-Ionization Detector (FID).*
Floppy-disk drive 55
Flow measurement adapter
Model 5360 XSD 106
Model 5360A XSD 106
Flow Solution IV 132
Fluorinated By-Products Analyzer 46
Operator's manual 120
FM-2001FID 52
FM-2001PID 52
FM-3001FPD 50
FM-3001PFPD 50
FM-3001XSD 50
Foam Buster 2, 6, 65
Foam filter 2
Foam Sensor 2, 6

Forceps, Teflon-coated 111
Four-port injection valve, KEL-F, Eclipse 63
Four-port sample valve, KEL-F, Model 4560 69
Frit purge gas line 68
Frit sparger 68, 86, 87
    Swage inlet 62, 68
    Swage inlet, frosted 62
Frit sparging purge tube assembly, DPM-16 86, 87
Frit/needle sparger 67
Front panel LED board, CFM 89
Front panel thumbwheel board, CFM 89
Fuse 119
    CFM 89
    DPM-16 86
    Eclipse 61
    Model 4551 74
    Model 4551A Water Autosampler 71
    Model 4560 67
    PFPD 111
Fuse holder cap 61
Fused silica DB-1 precolumn tubing 90

G

Gas controller 78
Gas flow control 110
Gas flow module 32, 119
Gas flow module kit, PFPD for Agilent 6890 110
Gas line connections 85
Gas module output tube, FID 115
Gas module to ignitor cable, FID 113
Gasket, FID 113
GC ready invert cable 89
GC Systems
    Pesticides Analysis System 38
    System BTEX Analysis System 41
GC trap, Ambersorb/carbon molecular sieve (ELCD) 121
GCF-100A 51
GCF-100A/FIO-100 51
GCI-100A 51, 53
GCI-510 53
GCP-530 53
GCP-540 53
GCPF-100 51
Gel permeation chromatography 43, 44
Glass loop upgrade, 5 mL, Model 4551 74
Glass syringe barrel, Model 4552 Water/Soil Autosampler 81, 82
Glassware 71, 74
    Model 4551A Water Autosampler 71
Glassware selection guide 95
Glow plug assembly cable, FID 113
GPC AutoPrep 2000 43
GPK-100 56
Graphite/Vespel ferrule 85, 89, 110
Green LED w/ cable 111
Gripper ring, Model 4552 Water/Soil Autosampler 80
GS-GasPro column 118
Guide rod assembly, Model 4552 Water/Soil Autosampler 83

H

H cable for Agilent 6890N/6850 60
Halogen mode kit, ELCD 101
Halogen mode resin cartridge, ELCD 104
Halogen Specific Detector (XSD)
    Adapters 106
    Cables 106
    Detector assembly 106
    Model 5360A reactor base assembly for Agilent 6890 107
    Operator's manual for Agilent 5890 106
    Operator's manual for Agilent 6890 106
    Operator's manual for Varian 106
    Reactor base assembly for Agilent 5890 108
    Replacement parts and supplies 106
Handshake pigtail cable
    Agilent 5890 60
    Agilent 5890/6890 89
    Agilent 5970 60
    Agilent 5970/5972MS (Pascal) 60
    Agilent 6890A/6890MS 60
    Agilent 6890N/6890A/6890MS/6850 60
    Shimadzu 17A 60
    Thermo Finnigan Trace 60
    To Agilent 5890 78, 110
    To Agilent 6890 78
    To Shimadzu 17A 78
    To Varian 3400 78
    Varian 3400 60
    Varian 3800/3900 60
Heated sampling lines 54
Heated transfer line
    DPM-16 86
    Eclipse 62
Heater 93
Heater and sensor cable assembly, LDVI 91, 92
Heater and thermocouple assembly
    Foam Buster 61
Heater assembly
    CFM injector 89
    Sparge mount, Eclipse 61
    Valve oven, Eclipse 61
Heater assembly cable
    For Agilent 5890, PFPD 110
    For Agilent 6890, PFPD 110
    For Shimadzu 17A, PFPD 110
    For Trace 2000, PFPD 110
Heater assembly for water management, Eclipse 61
Heater block
    LDVI 91, 92, 93
    Varian 34
Heater cable assembly, PFPD 112
Heater jacket kits, DPM-16 86

Heater, LDVI 91
Heater/sensor assembly, Foam Buster 65
Heater/sensor for Model 5360A & Agilent 6890, XSD 106
Heaters 67
    Eclipse 61
Helium flow controller, Model 4552 Water/Soil Autosampler 78
Helium gas pressure regulator, Model 4552 Water/Soil Autosampler 84
Helium manifold replacement assembly, Model 4552 Water/Soil Autosampler 81, 84
HSL-xxx 54
Hydrocarbon canister trap 121
Hydrogen gas flow controller, PFPD 110
Hydrogen leak detector 56
Hydrogen regulator, FM-2000 56

I

Ignitor assembly 112
Ignitor assembly cable, PFPD 110
Ignitor cable for Shimadzu 17A, FID 114, 115
Ignitor pigtail cable, FID 113, 115
Ignitor power cable for motherboard gas module, FID 113
Ignitor power cable, FID 115
Ignitor/bias cable for Varian, FID 114, 115
Infra-Sparge lamp, Eclipse 65
Infra-Sparge Sample Heater 7, 67
Injector assembly for Agilent 5890, CFM 89
Injector body, stainless steel, gold-plated, LDVI 91, 93
Injector end union, stainless steel, CFM 89
Injector mounting bracket screws, LDVI 91, 92
Injector mounting bracket, LDVI 91, 92
Injector mounting plate, LDVI 91, 92
Injector to ground cable, CFM 89
In-line regulator, Model 4551 74
Installation 144
Interface cable
    Model 4551 to SAM 77
    Model 4551A Water Autosampler to SAM 77
    Model 4552 Water/Soil Autosampler 78
    P&T 60
Interface card
    PID or FID 119
Interface kit
    Eclipse Sample Concentrator to Model 4552 Water/Soil Autosampler 62
    Model 4552 Water/Soil Autosampler to Model 4560 78
    Model 4552 Water/Soil Autosampler to Tekmar 78
Internal Carrier Flow Control 8
Internal standards 79
Internal standards valve, Model 4552 Water/Soil Autosampler 83
International
    Repairs 144
    Shipments 146
    Technical Support 144

J

Jet connector nut, XSD 106, 107, 108
Jet removal tool, XSD 106
Jet tube
    Glass lined, Model 5360 106
    Nonventing, Model 5360A XSD 106
    Tandem PID/XSD 109
    Venting, Model 5360A 106
    XSD 107, 108

K

KEL-F ferrule 85
Knurled fitting for water transfer line, Model 4560 79

L

Lamp cleaning kit 118
Lamp cover assembly, Infra-Sparge 65
Lamp cover assembly, Infra-Sparge Sample Heater 67
Lamp high voltage cable, PID 98
Lamp polishing kit, PID 98
Lamp sealing O-ring, PID 98, 99
Lamp sealing spring, PID 98, 99
Lamp sealing washer, PID 98, 99
Lamp support ring, PID 98, 99
Lamp, PID 98, 99
Leak detection 119
Leak Detector, Hydrogen 56
Leak hunter 119
Light pipe clamp, PFPD 111, 112
Light pipe, PFPD 111, 112
Lindane 121
Linear Mass Flowmeter 54, 56
Liner tube, LDVI 91, 92, 93
LKD-200 56
LMF-001 56
LMFC-XXX 54
LMF-xxx 54
Lock washer, stainless steel 113
Locking hex nut, LDVI 91
Locking ring, aluminum, CFM 89
Loop assembly, 25-mL, Model 4551A Water Autosampler 73
Loop assembly, 5-mL, Model 4551A Water Autosampler 73
Loop cover 71
    Model 4551 74
Loop, Model 4551 76
Loss in shipments 146
Low Volume Sampler 54
Low-Dead Volume Injector 11
Low-Dead-Volume Injector (LDVI)
    Agilent 5890 GC 93
    Agilent 6890 GC 92
    Column Ferrule 91
    Installation and maintenance guide 91
    Installation/maintenance guide 120

Replacement parts and supplies 91
Lower FID body ferrule, Vespel 113, 115
Lower soil purge gas needle assembly for double-ended vial, Model 4552 Water/Soil Autosampler 79, 83
LVS-001 54

M

Main board, Model 4551A Water Autosampler 71
Main PIC board with fuses, Eclipse 60
Makeup gas adapter kit, PID 99
Makeup gas inlet nut, PID 99
Makeup gas supply 99
Manifold O-ring, FID 113
Manifold to needle sleeve assembly, Model 4551 75, 76
Manuals and guides 120
MDD-100 56
Method 502.2 gas/non-gas standard 121
Method 502.2 standard 121
Methods 146
Micro all purpose cleaner 118
Microprocessor board, CFM 89
Microswitch, Model 4552 Water/Soil Autosampler 80
MicroTrap "A" Carboxen 1000 kit 69
MicroTrap "B" Carbosieve kit 69
MINICAMS 49, 50, 56
Plug-in modules 51
Sampling accessories 54
Mode kit 101
Electrolytic Conductivity Detector (ELCD) 101
Model 30
Model 4410 Flame-Ionization Detector (FID) 30
Assembly 115
Assembly parts 113
Operator's manual 120
Subassembly 113
Model 4415 Flame-Ionization Detector (FID) 30
Assembly 113, 115
Assembly parts 113
Operator's manual 120
Subassembly 114
Model 4430 Photoionization Detector (PID) 23
Fuse 119
Operator's manual (Agilent 5890/Varian 3400) 120
Operator's manual (Agilent 6890) 120
Operator's manual (Varian 3800) 120
Reactor base assembly and make gas adapter for the Agilent 6890 99
Model 4430 PID 41
Model 4450 Tandem PID/FID 30, 41
Model 4551 Water Autosampler
Firmware 74
Fuse 74, 119
Needle drive assembly 75
Operator's manual 74, 120
Replacement parts and supplies 74
Tubing schematic 76
Model 4551A Water Autosampler 12
Firmware 71
Fitting 71
Fuse 71, 119
Glassware 71
Needle drive assembly 72
Operator's manual 71, 120
Replacement parts and supplies 71
Tubing schematic 73
Upgrade kit for Eclipse operation 71
Model 4552 Water/Soil Autosampler 14
Accessory 78
Cable 78
Fitting 79
Gas controller 78
Interface cables 15
Interface fitting adapter to Model 4560 79
Interface kit 15
Internal standards parts 79
Lines 79
Operator's manual 120
Option 78
Probe assembly 79
Replacement parts and supplies 78
Robotic mechanism 80
Robotic mechanism schematic 80, 82, 83, 84
Syringe 81
Valve 81
Windows software 15
Model 4560
To CFM cable 89
Model 4560 Sample Concentrator
Battery 67
Cable 66
CPU board 67
Drain tube adapter assembly 66
Ferrule 66
Firmware EPROM w/ instructions 67
Fittings 66
Fuse 67, 119
Gas line connections to DPM-16 85
Heater 67
Lamp cover assembly 67
One year supplies kit 67
Operator's manual 67, 120
Plumbing schematic 70
Purge to air tube assembly 88
Sample heater lamp 67
Sparge door assembly 67
Sparge filter assembly 66
Sparge mount fitting 66
Syringe port adapter, KEL-F, female, Luer-Lok 66
Thermocouple 67
Transfer line 68
Transfer line adapter fitting 85
Tube assembly 69

Union bulkhead fitting for trap bulkhead 66
Union for sparge inlet arm, brass, male 66
Valve 69
Valve manifold heater cable 67
Valve/oven heater cable 67
Water management assembly 66
Water management fitting 66
Model 4660 Eclipse Sample Concentrator. See also *Eclipse Sample Concentrator.*
Model 5350 PID/ELCD 28
Model 5350 Tandem PID/ELCD 40
Model 5360 Halogen Specific Detector (XSD)
Operator's manual (Agilent) 120
Operator's manual (Varian) 120
Model 5360A Halogen Specific Detector (XSD) 26
Operator's manual 120
Reactor base assembly for Agilent 5890 108
Reactor base assembly for Agilent 6890 107
Model 5380 Pulsed Flame Photometric Detector (PFPD) 20
Operator's manual 120
Model 5380. *See Pulsed Flame Photometric Detector (PFPD).*
Model 5390 Tandem PID/XSD Detector 29
Model SP 2000 44
Monitoring status panel 55
Motor assembly
Front/back, Model 4552 Water/Soil Autosampler 80
Left/right, Model 4552 Water/Soil Autosampler 80
Stir, Model 4552 Water/Soil Autosampler 80
Up/down, Model 4552 Water/Soil Autosampler 80
Motor pulley
¼" for elevator and syringe, Model 4552 Water/Soil Autosampler 80
Front/back, left/right, and up/down, Model 4552 Water/Soil Autosampler 80
Model 4552 Water/Soil Autosampler 84
Mounting plate
Agilent 5890, PFPD 111
Agilent 6890, PFPD 111
PFPD 112
Shimadzu 17A, PFPD 111
Trace 2000, PFPD 111
Mounting screws, LDVI 91
MTK-050 56
Mud-Dawg 67, 68, 86

N

Needle 67, 86
DPM-16 86
Frit sparging 87
Needle sparging 87
Needle drive assembly 72, 75
Model 4551 75, 76
Model 4551A Water Autosampler 71, 72, 73
Needle drive cover
Model 4551 74
Model 4551A Water Autosampler 71
Needle manifold, Model 4551A Water Autosampler 72
Needle purge gas line 68
Needle sparge conversion kit to SoilVial 15, 78
Needle sparge hardware kit 62
Needle sparge probe assembly, Model 4552 Water/Soil Autosampler 79, 82
Needle sparger 86, 87
Disposable 68
Frosted 62
Hardware kit 68
Reuseable 68
Swage inlet 68
Needle sparging purge tube assembly, DPM-16 86, 87
Needle valve, Nupro 110
NiCat reaction tube for halogens, ELCD 102
Nickel reaction tube for nitrogen 102
Nickel tubing 122
Nitrogen mode kit, ELCD 101
Nitrogen mode resin cartridge, ELCD 104
Nitrogen mode scrubber, ELCD 104
Nitrogen regulator, FM-2000 56
Norprene tubing 75, 76
Nut
Aluminum 87
Brass/nickel hose 72
Clear, Cheminert, Model 4551A Water Autosampler 71
Extended, stainless steel 61
Female 66
Female, brass 61
Female, stainless steel 74, 75, 98
Female, stainless steel, Model 4551A Water Autosampler 71
Female, stainless steel, Swagelok 79
For outlet restrictor, PID 98
Hex, stainless steel, for trap bulkhead 61
Hex, stainless steel, for water management fitting 61
Knurled stainless steel, male 66
Knurled, female, stainless steel 87, 88, 101, 104
Knurled, male, stainless steel 86, 87, 91, 101
Male, brass, nickel-plated 98
Male, brass/nickel 113
Male, stainless steel 72, 74, 75, 85, 87, 98, 101, 102, 106
Male, stainless steel, Model 4551A Water Autosampler 71
Polypropylene 72
Polypropylene, Model 4551A Water Autosampler 71
Stainless steel spring 72, 74, 75
Stainless steel spring, Model 4551A Water Autosampler 71
Nut driver 121
Nut driver tool 101
Nut fitting
Male, brass/nickel 114
Male, stainless steel 110

O

OIM EPC gas flow module 33, 119
For Agilent 6850 110
For Agilent 6890 110
On-trap injection port 6
Operator's manual
Electrolytic Conductivity Detector (ELCD) 101
Model 4551 74
Model 4551A Water Autosampler 71
Model 4560 67
Optical filter
BG-12, purple, PFPD 111
BG-3, PFPD 111
BG-39, blue, PFPD 111
GG-495, yellow, PFPD 111
RG-695, black, PFPD 111
UV-34, clear, PFPD 111
O-ring
Kalrez 106
Lamp sealing, PID 98
Light pipe, PFPD 112
Light pipe, Viton, PFPD 111
Silicone 114
Viton 113
With mesh, Eclipse 63
Outlet restrictor tube, stainless steel, PID 98

P

PCM (EPC) pneumatic control module kit 33
PCTs 56
PDAR-xxx 55
PEEK tubing 72, 104, 122
Peristaltic sample pump, Model 4551A Water Autosampler 71, 73
Pesticide column kit 118
Pesticide standard 121
Pesticides Analysis System 38, 42
PFPD remote start cable
Agilent 6890 and 5890 110
Shimadzu 17A 110
PFPD sensor assembly 111
PFPDView software 22, 111
Operator's manual 120
pH Express 2, 5
Phosphorus permeation device kit, PFPD 111
Photoionization Detector (PID) 23
Cable 98
Cables 98
Electrometer card 119
Ferrules 98
Ferrules and fittings 98
Fittings 98
Interface card 119
Lamp cleaning kit 118
Lamp supplies 98
Replacement parts and supplies 98
Tubing 98
Vent supplies 98
Photoionization Detector (PID). See also *Model 4430 Photoionization Detector (PID).*
Photomultiplier housing assembly, PFPD 111
Photomultiplier housing, PFPD 112
Photomultiplier thumbscrew, PFPD 111
Photomultiplier tube
PFPD 112
R1924, PFPD 111
R1925, PFPD 111
R5070, PFPD 111
PID outlet
Tandem PID/ELCD 109
Tandem PID/XSD 109
PID/FID gas module kit, two line for Agilent 5890 113
Pinch valve, Model 4560 69
Plug
Brass/nickel, Model 4551A Water Autosampler 71
w/ ferrule, male, stainless steel 88
Plug fitting
Brass/nickel 61
Nickel plated 61
Plug-in modules, MINICAMS 51
Plumbing schematic, Model 4560 70
Plunger assembly, Model 4552 Water/Soil Autosampler 81, 82
Plunger drive bracket, Model 4552 Water/Soil Autosampler 81
Plunger rod, Model 4552 Water/Soil Autosampler 81
Pneumatics control module 119
Power cord 62, 71, 74, 89, 98, 110, 121
Power supply board, CFM 89
Pressure regulator
Eclipse 60
Model 4551A Water Autosampler 71, 73
Upgrade kit, Model 4560 69
Pressure switch, Model 4551A Water Autosampler 71, 73
Pressure transducer assembly, Eclipse 60
Printer 55
Probe assembly, XSD 106, 107, 108
Probe block heater assembly, Model 4552 Water/Soil Autosampler 80
Probe guide support rod, Model 4552 Water/Soil Autosampler 79
Probe guide support, Model 4552 Water/Soil Autosampler 83
Process Control interface 55
Products
Discontinued 146
Upgrades 144
PRT 93
PRT, LDVI 91
PT Express 9
Operator's manual 120

Transfer line 10
Pulsed Flame Photometric Detector (PFPD)
Cables 110
Detector assembly 112
Ferrules 110
Fittings 110
Gas flow control 110
Operator's manual 111
Replacement parts and supplies 110
Sensor assembly 111
Purge 81
Purge bulkhead/regulator tube assembly, Model 4560 69
Purge FC out/solenoid manifold tube assembly, Model 4560 69
Purge flow controller, Model 4560 70
Purge gas cut-off valve assembly, Model 4552 Water/Soil Autosampler 81
Purge gas flow controller, Eclipse 60
Purge gas outlet 88
Purge gas pressure gauge, Model 4552 Water/Soil Autosampler 78
Purge gas regulator, Model 4552 Water/Soil Autosampler 78
Purge gas tube assembly, Model 4560 to DPM-16 85
Purge gas/frit sparger tube assembly, Model 4560 69
Purge gas/needle sparger tube assembly, Model 4560 69
Purge needle selection guide 96
Purge out/gauge tube assembly, Model 4560 69

R

Rapid Swap Eclipse Modules 5
RapidVap N2 Evaporation System 45
Reaction tube
ELCD 101, 102, 103, 109
Reactor assembly
ELCD 103
Nut, ELCD 101
XSD 106, 107
Reactor base 33
Adapter nut, ELCD 101
Adapter, ELCD 102, 103
Adapter, tandem PID/ELCD 109
Assembly, ELCD 103
Nut, ELCD 102
Seal, ELCD 103
Seal, graphite/Meldin, ELCD 102
Reactor cap
ELCD 103
XSD 106, 107, 108
Reactor case, XSD 106, 107, 108
Reactor core
ELCD 103
Models 5220/5320, ELCD 102
XSD 106, 107, 108
Reactor heatsink
ELCD 103
Reactor interface cable, ELCD 100
Reactor nut, Tandem PID/ELCD 109
Reactor power cable
ELCD 100
XSD 106, 107, 108
Reactor top
Fitting, ELCD 103
Nut, ELCD 101, 102
Nut, tandem PID/ELCD 109
Union assembly, ELCD 101
Reactor union, Tandem PID/ELCD 109
Reagent water bottle assembly
Model 4551 74
Model 4551A Water Autosampler 71
Reagent water pump, Model 4551A Water Autosampler 71, 73
Reamer 121
Recirculating bath 15
Model 4552 Water/Soil Autosampler 78
Tubing kit, Model 4552 Water/Soil Autosampler 78
Red LED w/ cable 111
Refrigerated recirculating water bath 12
Regulator in carrier gas FC in Model 4560 tube assembly 69
Regulator out to purge gas FC tube assembly, Model 4560 69
Regulator out/solenoid manifold tube assembly, Model 4560 69
Regulator, Standards Addition Module (SAM) 77
Remote start cable 100
Remote start lamp cable, PID 98
Repairs
International 144
Onsite 144
Return to factory 144
Replacement parts
Delivery 144
Reservoir bottle, safety coated, Model 4552 Water/Soil Autosampler 79
Resin cartridge 104
Halogen mode, ELCD 104
Nitrogen mode, ELCD 104
Sulfur mode, ELCD 104
Retaining ring pliers 114
Retaining ring, FID 114, 115
Returns 146
RGA-100 56
RGC-03 56
RGH-100 56
RGI-100 56
RGN-100 56
Rinse water kit 15
Rinse water kit, for interfacing direct water line to Model 4552 Water/Soil Autosampler 78
Robotic mechanism 80
Rotor loop
Model 4552 Water/Soil Autosampler 83
Standards valve, Model 4552 Water/Soil Autosampler 79

RPK-500 56
RS-232 9-pin to 9-pin serial cable for WinPulse software 110
Rtx-1 column 118
Rtx-35 column 118
Rtx-5 column 118
Rtx-VMS column 118

S

S 38
Sample 2, 11
Sample Concentrators 9
Sample filter assembly
    Model 4551 74, 75
    Model 4551A Water Autosampler 72
Sample head kit, AMPS 16
Sample heater lamp, Model 4560 67
Sample heater thermocouple assembly, Model 4560 67
Sample loop
    25 mL 12
    25 mL, Model 4551A Water Autosampler 71
    5 mL, Model 4551A Water Autosampler 71
    5-mL 16
    Model 4551 74
Sample needle
    Foam Buster 65
    Frit sparger 62, 86
    Needle sparger 62
    w/ Side hole, for needle sparger 86, 87
Sample pump tubing kit, Model 4551A Water Autosampler 72
Sample transfer assembly, PEEK, Model 4551 75
Sample transfer line
    Model 4551 76
    PEEK, Model 4551 75
Sample tray
    Model 4551 74
    Model 4551A Water Autosampler 71
    Model 4552 Water/Soil Autosampler 15
Sample valve assembly, Standards Addition Module (SAM) 77
Sample valve mounting bracket
    DPM-16 86, 87
    Eclipse 63
Sampling 54
Screw 111
    Phillips oval head, stainless steel 61
    Socket head cap, stainless steel 61
    Socket head cap, stainless steel, 61
    Stainless steel 113
    Torx, stainless steel 111
Screw cap vials, w/ caps and septa 81
Screw set
    Stainless steel 65
Screwdriver
    SOS adjustment 65
Scrubber 121
    GC trap 121
    Hydrocarbon canister trap 121
    In-line molecular sieve 121
Secondary needle guide, LDVI 91, 92, 93
Seminars 145
Sensor assembly
    No vial, Model 4552 Water/Soil Autosampler 80
    PFPD 111
Septa 81
    Silicone 74, 89
    Silicone, Teflon faced 71
    Water vial, Teflon/Silica 81
Septum nut assembly, LDVI 91, 92, 93
Septum piercing needle
    Model 4551 74, 75
    Model 4551A Water Autosampler 71, 72
Septum, LDVI 91, 92, 93
Series 2001 MINICAMS 52
    Plug-in GC module 53
Series 3001 MINICAMS 50
Service
    Contracts 144
Shipment, damages or loss in 146
    International 146
Signal out cable 100
Signal output cable
    To Agilent 5890 AIB, PFPD 110
    To Agilent 6890 AIB, PFPD 110
    To Agilent integrator, PFPD 110
    To spade lugs, PFPD 110
Signal probe to controller cable, XSD 106, 107, 108
Silica gel 63, 69
Silicone tubing 76
    Clear 69, 75, 104, 122
Single Burket valve, Model 4552 Water/Soil Autosampler 84
Single channel electrometer 119
Six-port valve 70
    For internal standards, Valco, Model 4552 Water/Soil Autosampler 79
    Model 4551 74
    Model 4551A Water Autosampler 71, 73
    Stainless steel, Eclipse 63
    With actuator, Model 4560 69
    With linkage (no actuator), Model 4560 69
    With motor for internal standards, Valco, Model 4552 Water/Soil Autosampler 79
Six-port valve/sparge manifold tube assembly, Model 4560 69
Snoop leak detector 119
Software
    CHROM-NET 55
    PFPDView 22
    WinPulse 22
    WinSEP 43
Soil probe assembly, double-ended vial, Model 4552 Water/Soil Autosampler 79, 82

Soil purge gas transfer line, Model 4552 Water/Soil Autosampler 79
Soil septa, low bleed 81
SoilVial 14, 81
    Conversion kit to needle sparge 15
    Conversion kit to needle sparge, Model 4552 Water/Soil Autosampler 78
    Heater assembly, Model 4552 Water/Soil Autosampler 83
    Upper soil heater assembly, Model 4552 Water/Soil Autosampler 80
Solenoid manifold/purge valve tube assembly, Model 4560 69
Solenoid manifold/six-port valve tube assembly, Model 4560 69
Solenoid mixing manifold assembly, Model 4552 Water/Soil Autosampler 81, 84
Solvent flow block, ELCD 104, 105
Solvent pump assembly, ELCD 104, 105
Solvent reservoir, ELCD 104, 105
Solvent system
    Electrolytic Conductivity Detector (ELCD) 104
Sparge cover assembly, Eclipse 60
Sparge door assembly, Model 4560 67
Sparge filter 68
Sparge filter assembly, Model 4560/4551A/AMPS 66
Sparge mount 88
Sparge mount bracket, Eclipse 60
Sparge mount cover assembly, Eclipse 60
Sparge mount cover, Model 4560 85
Sparge mount fitting, Model 4560 66
Sparge mount heater and thermocouple kit, Model 4560 67
Sparge mount manifold, Foam Buster 65
Sparge mount manifold, standard, Eclipse 60
Sparge mount/water management heater cable, Model 4560 67
Sparge Overfill Sensor (SOS) 2, 6, 65
    Shield 65
Sparge vessel assembly 68
Sparger 68
Sparger kits 87
Sparger wrench 62
Spring
    Lamp sealing, PID 98
Spring clip for drain tube 61
Spring, stainless steel 72
S-PRO 3200 38
SRD-100 55
SSS-021 54
SSS-121 54
Stabilwax 118
Stabilwax column 118
Stainless steel ferrule 85, 110
Stainless steel tube 99
Stainless steel tubing 72, 98, 104, 122
Stainless steel, gold-plated ferrule 85
Stainless steel/Silcosteel tubing 122
Stainless steel/Sulfinert tubing 122
Standards 62, 121
Standards Addition Module (SAM) 13
    For AMPS 16
    Installation/maintenance guide 120
    Replacement parts and supplies 77
    Standards reservoir tube assembly 77
Standards pick-up line, Model 4552 Water/Soil Autosampler 79
Standards policy 146
Standards reservoir mount, Model 4552 Water/Soil Autosampler 79, 83
Standards reservoir vial, Model 4552 Water/Soil Autosampler 79, 83
Standards reservoir, Standards Addition Module (SAM) 77
Standoff, brass, female/female 65
Status Relay Device 55
STD-100 54
Stir bar 79
    SoilVial 81
    Water vials 81
Stir motor assembly, Model 4552 Water/Soil Autosampler 83
Stream selection system 54
Stylus, touchscreen 62
Sulfinert 38
Sulfur mode kit, ELCD 101
Sulfur mode resin cartridge, ELCD 104
Sulfur mode scrubber, ELCD 104
Sulfur permeation device kit, PFPD 111
Support
    Applications 145
    System 145
    Technical Support Hotline 144
Syringe 68, 87, 89, 121
    2" needle, gas tight 121
    Luer-Lok 81, 87
    w/ Luer-Lok 68, 121
Syringe and elevator limit switch assembly, Model 4552 Water/Soil Autosampler 80
Syringe and elevator limit, Model 4552 Water/Soil Autosampler 84
Syringe mixing manifold assembly, Model 4552 Water/Soil Autosampler 81, 83
Syringe motor assembly, Model 4552 Water/Soil Autosampler 80
Syringe mount, Model 4552 Water/Soil Autosampler 81
Syringe O-ring, Model 4552 Water/Soil Autosampler 81
Syringe packing, Model 4552 Water/Soil Autosampler 81
Syringe port adapter, Model 4560 66
Syringe thumbscrew, Model 4552 Water/Soil Autosampler 81
System 40
System BTEX 41
System support 145

System VOC 40

T

Tandem Detectors
- Model 5350 PID/ELCD 28
- PID/ELCD and Tandem PID/XSD replacement parts and supplies 109

Technical Support Hotline 144
Tee
- Fitting, male 110
- Fitting, Tandem PID/XSD 109
- Model 4551A Water Autosampler 71

Teflon ferrule 85
Teflon tubing 72, 73, 75, 76, 104, 122
Temperature sensor assembly cable
- Agilent 5890, PFPD 110
- Trace 2000, PFPD 110

Tenax trap 63, 69
- Glass 88
- Stainless steel 88

Thermal desorber 54
Thermocouple assembly
- Sample heater option, Eclipse 61
- Sparge mount, Eclipse 61
- Valve oven, Eclipse 61
- Water management, Eclipse 61

Thermocouple I/O board, Eclipse 60
Thermocouple probe cable, CFM 89
Thermocouples 67
- Eclipse 61

Thimet 121
Three 84
Three-port injection valve, KEL-F, Eclipse 63
Three-port sample valve, 10-32, KEL-F, Model 4560 69
Three-port sample valve, KEL-F, DPM-16 87
Three-port valve w/ electric actuator, DPM-16 87
Three-position valve w/ actuator, Standards Addition Module (SAM) 77
Three-position valve w/o actuator, Standards Addition Module (SAM) 77
Three-way dry purge valve, Eclipse 63
Three-way gripper solenoid valve assembly, standard mount, Model 4552 Water/Soil Autosampler 81
Three-way isolation valve, Eclipse 63
Three-way manifold valve, Model 4560 69
Three-way pressure gas solenoid valve assembly, manifold mount, Model 4552 Water/Soil Autosampler 81
Three-way pressure gas solenoid, manifold mount, Model 4552 Water/Soil Autosampler 84
Three-way pressure gas solenoid, standard mount, Model 4552 Water/Soil Autosampler 84
Three-way solenoid valve, Model 4551A Water Autosampler 71
Three-way upper soil valve, heated, Model 4552 Water/Soil Autosampler 81
Three-way valve, Model 4551A Water Autosampler 73
Three-way vent valve, ELCD 102, 103
Thumbscrew, brass/nickel 65
Timing belt
- Front/back motor, Model 4552 Water/Soil Autosampler 80
- Left/right motor, Model 4552 Water/Soil Autosampler 80
- Up/down motor, Model 4552 Water/Soil Autosampler 80
- Vial elevator and syringe motors, Model 4552 Water/Soil Autosampler 80

Timing pulley, leadscrew, Model 4552 Water/Soil Autosampler 80, 84
Tools 121
Touchscreen 2
- Stylus 62

Tower assembly, PID 98, 99
Tracking system, computerized 144
Trademarks 148
Training 145
Transfer gas assembly, Model 4551 75
Transfer gas line, Model 4551 75, 76
Transfer gas needle sleeve
- Model 4551 74, 75
- Model 4551A Water Autosampler 71, 72

Transfer line
- ELCD 105
- Model 4551 76
- Model 4560 68, 70
- Stainless steel, Model 4552 Water/Soil Autosampler 79
- Tandem PID/ELCD 109

Transfer line adapter fitting, Model 4560 85
Transfer line assembly
- Eclipse 62
- Eclipse/4551A 72
- Model 4560/4551A 72
- SAM/4551A 72

Transfer line heater assembly, Model 4552 Water/Soil Autosampler 80
Transfer line to manifold assembly, Model 4551 75, 76
Transfer line to Model 4560/transfer line to SIM A assembly, Model 4551 75
Transfer line w/ heater assembly and bracket/clamp, Model 4560 or Tekmar 2000/3000 79
Transfer line w/ heater assembly, Model 4560 or Tekmar 2000/3000 79, 82
Trap 70
- #0, blank (no sorbent) 63, 69
- #10, Tenax/silica gel/carbon molecular sieve 63, 69
- #11, VOCARB 3000 63, 69
- #12 , BTEX (Carbopack B/Carbopack C) 69
- #12, BTEX (Carbopack B/Carbopack C) 63
- #7, Tenax only 63, 69
- #8, Tenax/silica gel 63, 69
- #9, Tenax/silica gel/charcoal 63, 69
- MicroTrap "A" Carboxen 1000 kit 69

MicroTrap "B" Carbosieve kit 69
Trap bulkhead fitting 61
Trap cover, Eclipse 60
Trap transformer assembly, Eclipse 60
Trap/six-port valve tube assembly, Model 4560 69
Tube 98
Copper 113
Reaction, ELCD 102, 103, 109
Tube assembly
Eclipse 63
Eclipse to air tube 88
Model 4506 to SAM 77
Model 4551 to SAM 77
Model 4551A Water Autosampler to SAM 77
SAM to Eclipse 77
SAM to Model 4560 77
Standards reservoir, Standards Addition Module (SAM) 77
Tube, reaction, ELCD 101
Tubing 69, 104, 122
Alumina 90
CFM 90
Copper 98, 114, 122
Copper, cleaned 63, 69, 75
DB-1, precolumn 122
Deactivated fused silica, precolumn 122
Fused silica DB-1 precolumn 90
Nickel 122
Norprene 75
PEEK 72, 104, 122
Silicone, clear 69, 75, 104, 122
Stainless steel 63, 72, 98, 104, 114, 122
Stainless steel/Silcosteel 122
Stainless steel/Sulfinert 122
Teflon 72, 75, 102, 104, 122
Tygon 72, 75
Tygon, clear 75
Uncoated fused silica precolumn 90
Urethane, blue 72
Urethane, brown 72, 75
Urethane, clear 63, 69, 72, 122
Urethane, green 72
Urethane, red 72
Viton, black 75
w/o fittings, PEEK 88
Tubing assembly, Model 4551A Water Autosampler 73
Tubing schematic
Model 4551 76
Model 4551A Water Autosampler 73
Two-way manifold valve, brass/nickel, Viton, Eclipse 63
Two-way soil purge gas solenoid valve assembly, standard mount, Model 4552 Water/Soil Autosampler 81
Two-way soil transfer gas solenoid valve assembly, manifold mount, Model 4552 Water/Soil Autosampler 81
Two-way soil transfer gas solenoid valve assembly, standard mount, Model 4552 Water/Soil Autosampler 84
Two-way soil transfer gas solenoid, manifold mount 84
Two-way vent boost valve
XSD 106, 107
Two-way vent exit valve
XSD 106, 108
Two-way vent exit valve option, XSD 108
Two-way vent valve 103
ELCD 102
PID 98
Tygon tubing 73, 75, 76
Clear 72, 75
Type 89
Type K thermocouple, CFM 89

U

Uncoated fused silica precolumn tubing 90
Union 75
Brass, male 66
Bulkhead, female, stainless steel 61
Female w/ nuts, stainless steel 104
Female, brass 89
Female, stainless steel 61, 86, 91, 101
Male fitting 72
Male, brass 61, 86, 87
Male, stainless steel 74
Male-female, tapered, stainless steel 102
w/ ferrules, male, brass 88
w/o nut, stainless steel, gold-plated 87
Union bulkhead fitting, Model 4560 66
Union for sparge inlet arm 66
Union, stainless steel, Model 4551A Water Autosampler 71
Upgrading products 144
Upper FID body ferrule 113, 115
Upper soil valve assembly, Model 4552 Water/Soil Autosampler 82
Upper soil valve heater assembly, Model 4552 Water/Soil Autosampler 80
Upper soil valve heater, Model 4552 Water/Soil Autosampler 82
Urethane tubing
Blue 72, 73
Brown 72, 73, 75
Clear 69, 72, 73, 122
Green 72, 73
Red 72, 73
UV Detector/Chart Recorder 44

V

Valve 69
DPM-16 87
Eclipse 63
Model 4552 Water/Soil Autosampler 81
Needle, PID 99
Three-way vent, ELCD 102, 103
Two-way vent, ELCD 102, 103

Two-way vent, PID 98
Valve manifold assembly, Eclipse 63
Valve manifold heater cable, Model 4560 67
Valve manifold thermocouple, Model 4560 67
Valve oven cover assembly, Eclipse 60
Valve oven/sparge mount thermocouple assembly, Model 4560 67
Valve solenoid/sparge manifold tube assembly, Model 4560 69
Valve to manifold assembly, Model 4551 75, 76
Valve to needle assembly, Model 4551 75, 76
Valve/oven heater cable, Model 4560 67
Variable split sampler 54
Vent outlet tube assembly, PID 98
Vent valve assembly, PID 99
Vent valve cable
Model 5320 and Agilent 5890 100
Model 5320 and Agilent 6890 100
Model 5520 100
PID 98
Vent valve needle valve, PID 99
Vent valve option
Model 5360 XSD 107
Model 5360A XSD 107
XSD 107, 108
Vent valve power cable for Agilent 5890, XSD 106
Vent valve restrictor element, ELCD 102, 103
Venting option
Agilent 5890, XSD 106
Agilent 6890, XSD 106
Shimadzu 17A, XSD 106
Vial 71, 81
VOA 74
Vial gripper block assembly, Model 4552 Water/Soil Autosampler 80
Vial gripper piston and O-ring, Model 4552 Water/Soil Autosampler 80
Vial, wash/waste station 71, 74
Visible light filter, Infra-Sparge 65
Viton tubing 76
black 75
VOA vial kit 71
VOC 40
VOCARB 3000 63, 69
VSS-020B 54

W

Warranties 145
Extended 144
Information 145
Wash bottle plug assembly, Model 4552 Water/Soil Autosampler 79
Wash bottle top, Model 4552 Water/Soil Autosampler 79
Washer
Aluminum 107, 111
Lamp sealing, PID 98
Star, external, stainless steel, for trap bulkhead fitting 61
Star, external, stainless steel, for water management fitting 61
Waste line
SAM 77
Waste line replacement kit, Model 4552 Water/Soil Autosampler 79
Waste lines, Standards Addition Module (SAM) 77
Water heater assembly, Model 4552 Water/Soil Autosampler 80
Water management
Assembly 66
Fitting 61, 66
Model 4560 70
Six-port valve tube assembly, Model 4560 69
Thermocouple 67
Water probe assembly, Model 4552 Water/Soil Autosampler 79, 82
Water probe screen, Model 4552 Water/Soil Autosampler 79, 81, 83
Water vial cup 81
Water vial cup, Model 4552 Water/Soil Autosampler 83
Water vials, USEPA 81
WinPulse software 20, 110, 111
WinSEP 43
WinTrap Plus
Cable 66
Operator's manual 120
Wrench 62, 121
Wrench, sparger 67

X

XSD. See also *Halogen Specific Detector (XSD)*, *Model 5360 Halogen Specific Detector (XSD)*, or *Model 5360A Halogen Specific Detector (XSD).*
XSD-101 51